RCC10-18/10F
RCC10-18/12F
RCC10-18/6
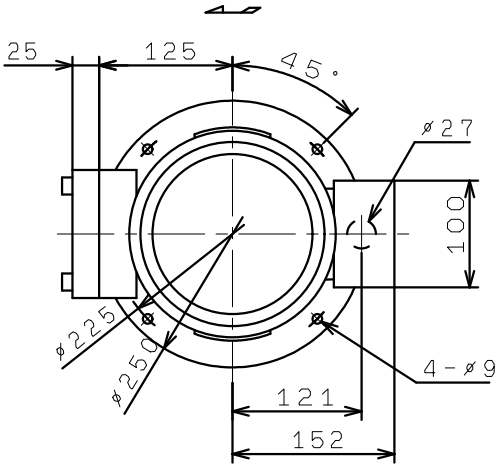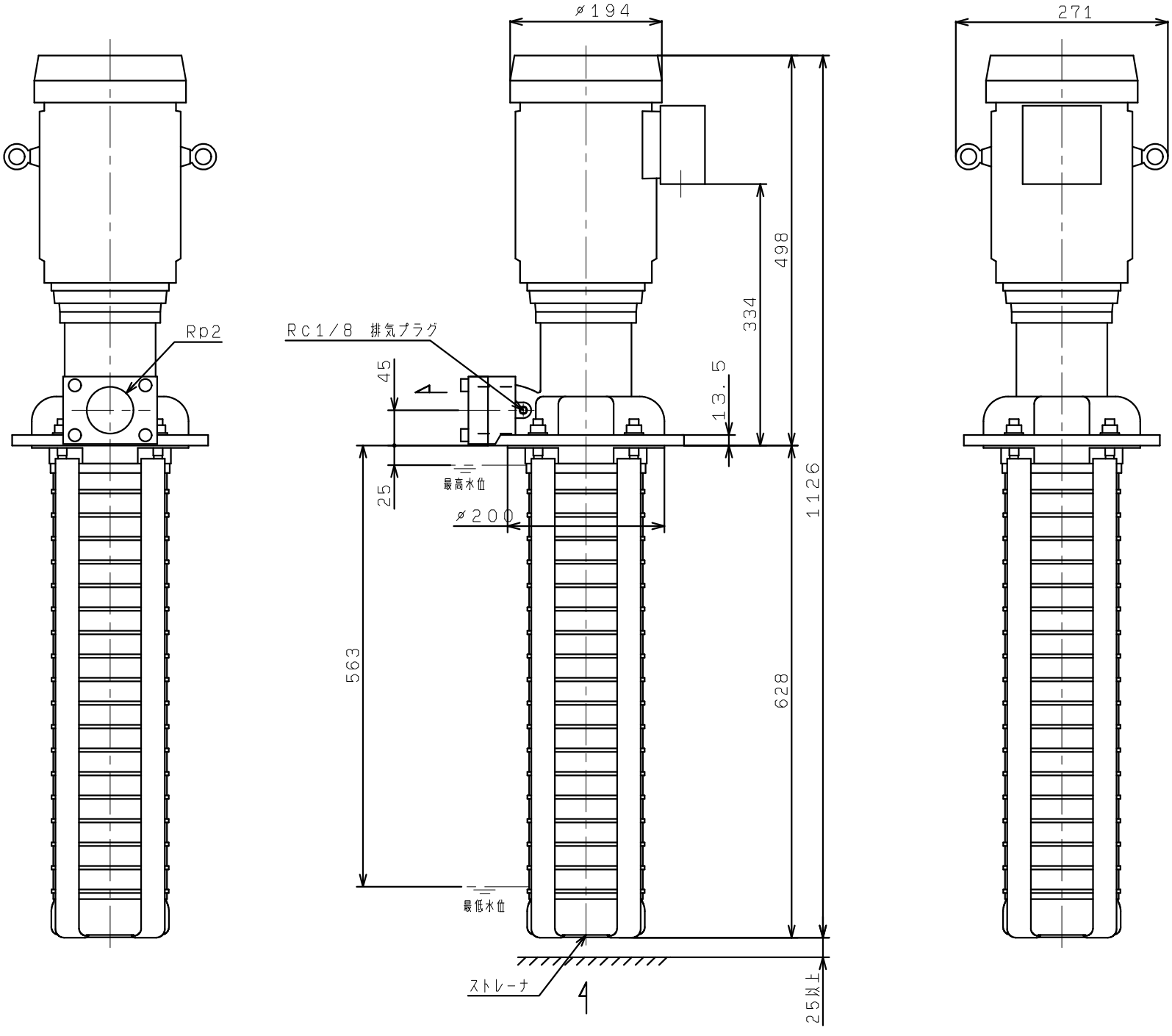
ROTATION