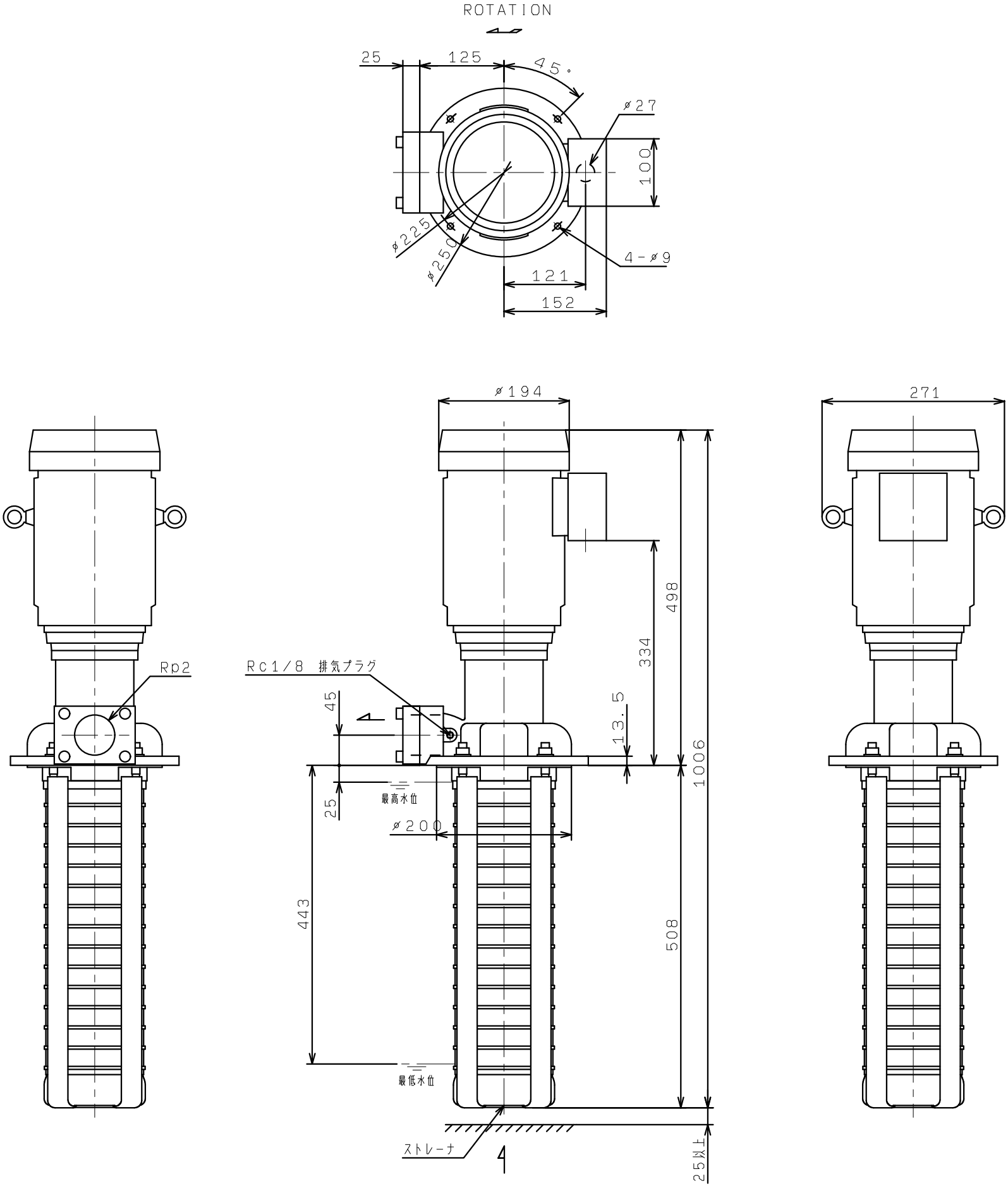RCC10-14/10F
RCC10-14/12F
RCC10-14/6