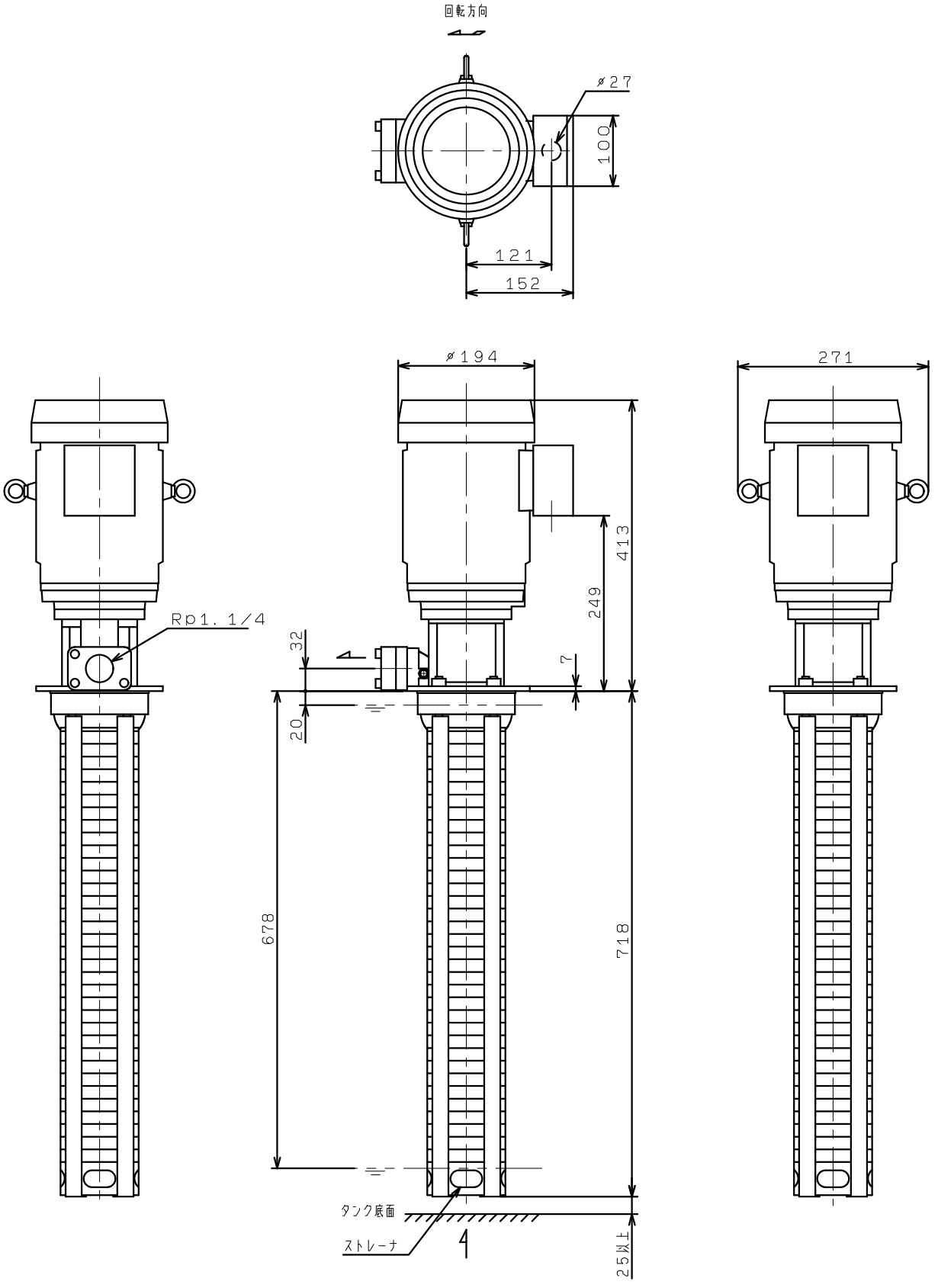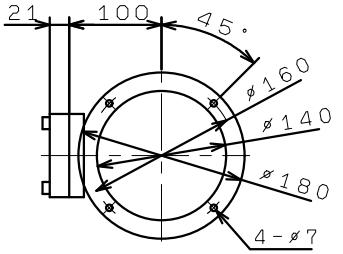RCC1-33/23
RCC1-33/25
RCC1-33/27