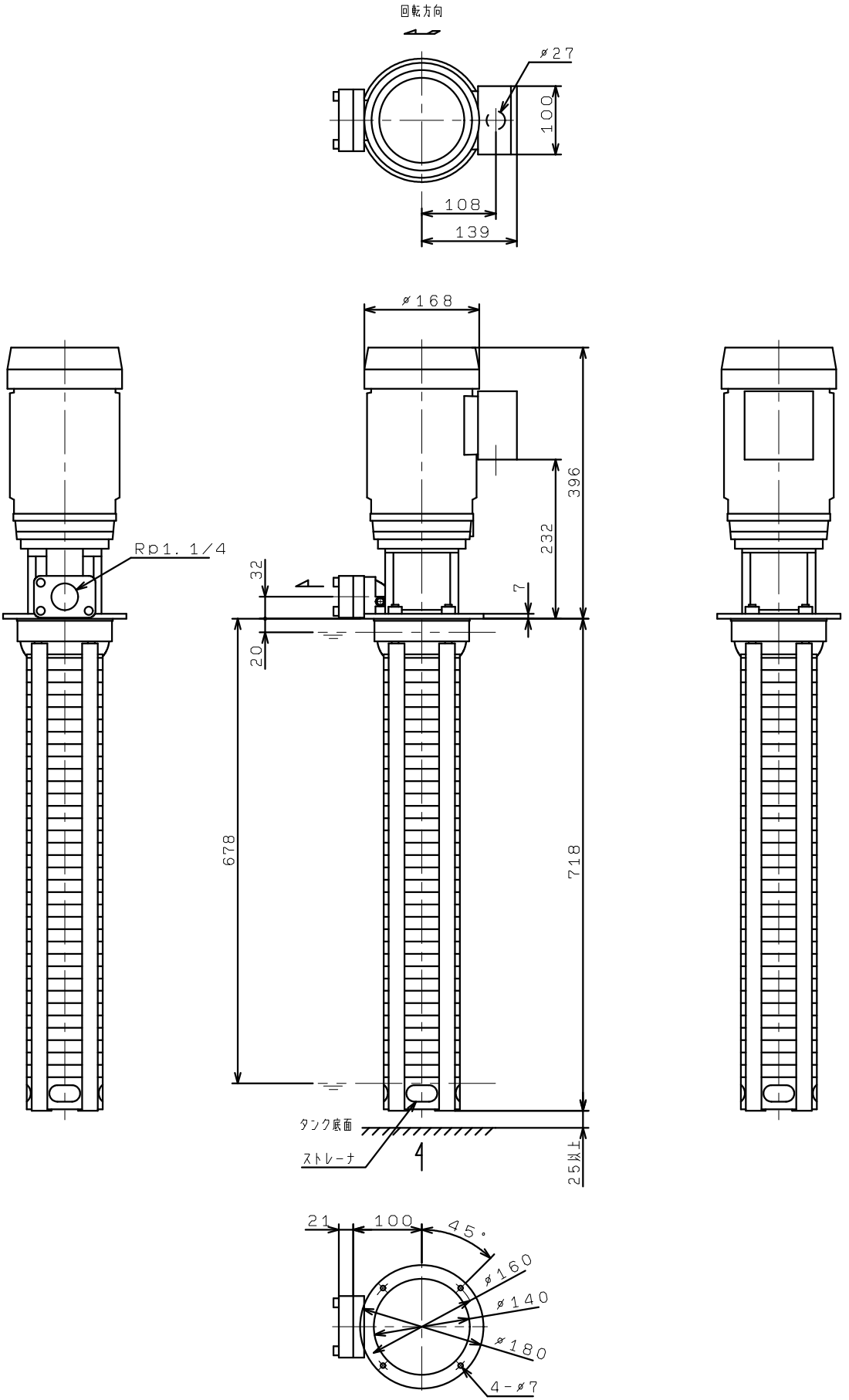RCC1-33/17
RCC1-33/18
RCC1-33/21
RCC1-33/24F
RCC1-33/27F
RCC1-33/29F
RCC1-33/30F
RCC1-33/32F
RCC1-33/33F