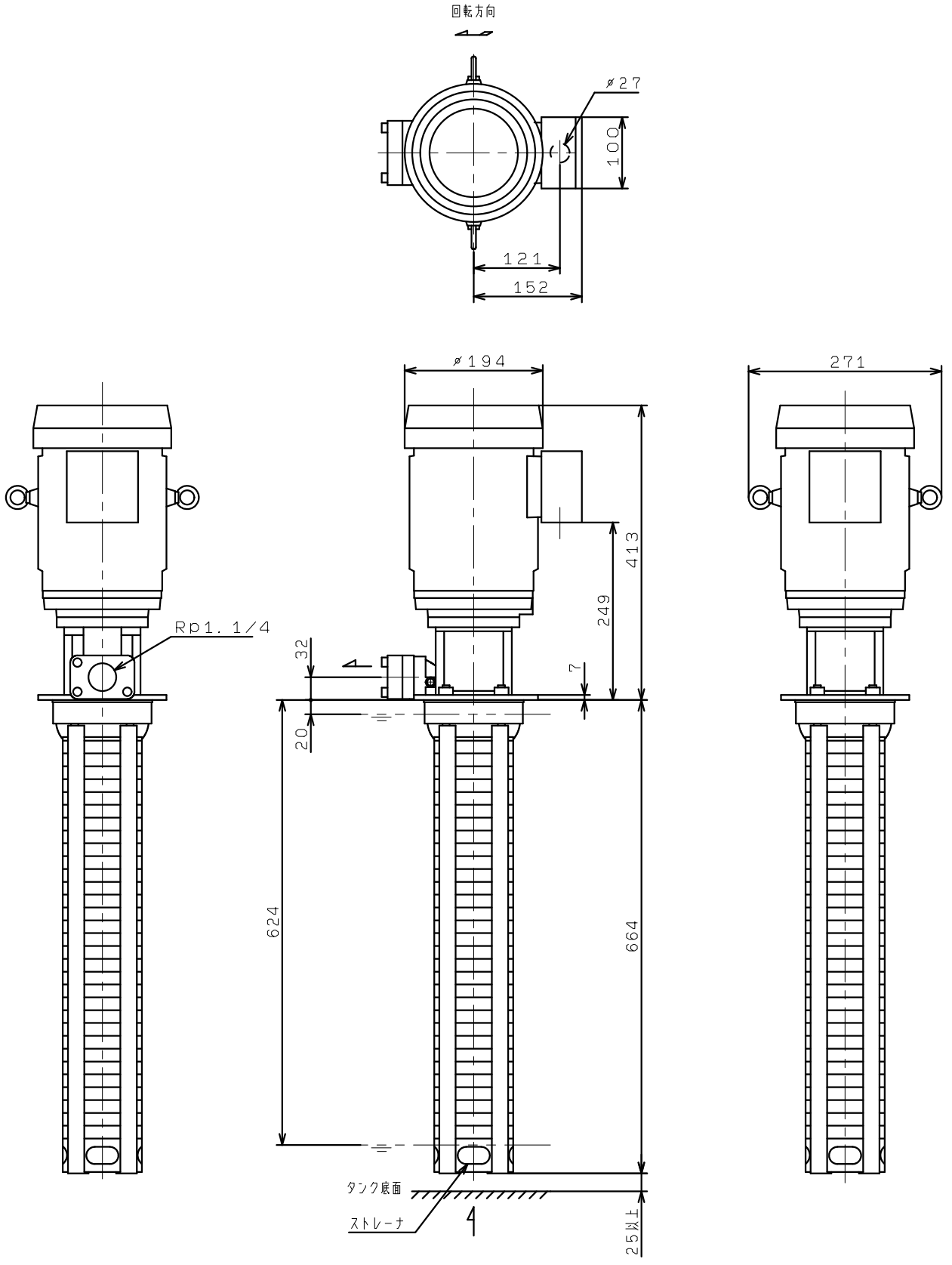RCC1-30/23
RCC1-30/25
RCC1-30/27