RCA-250

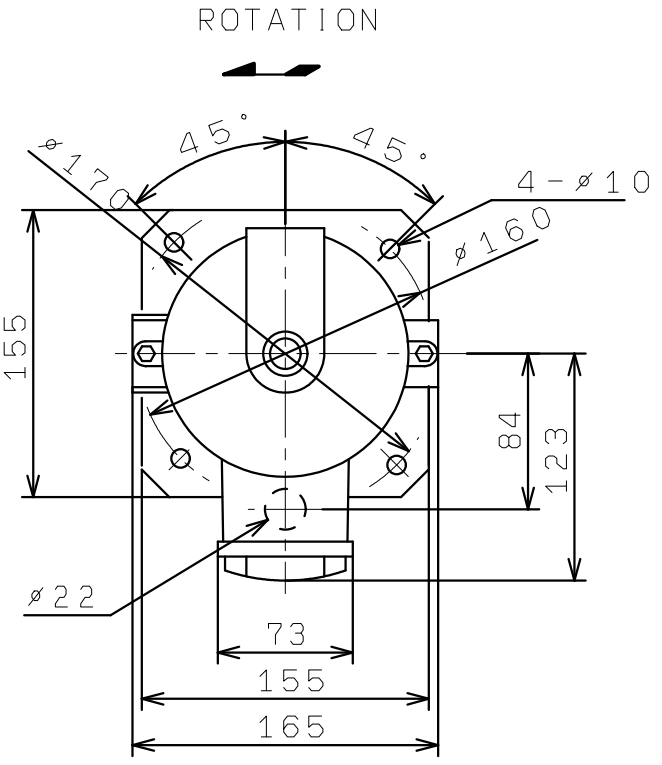
ROTATION
45°
45°
ø170
4-ø10
ø160
155
84
123
ø22
73
155
165

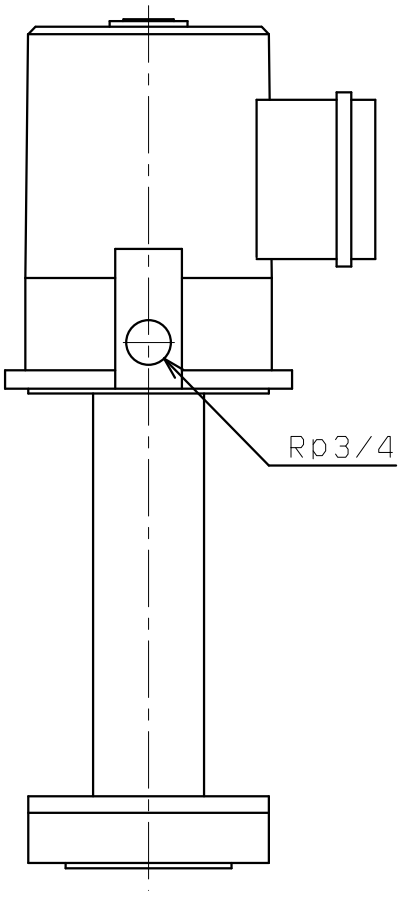
Rp3/4

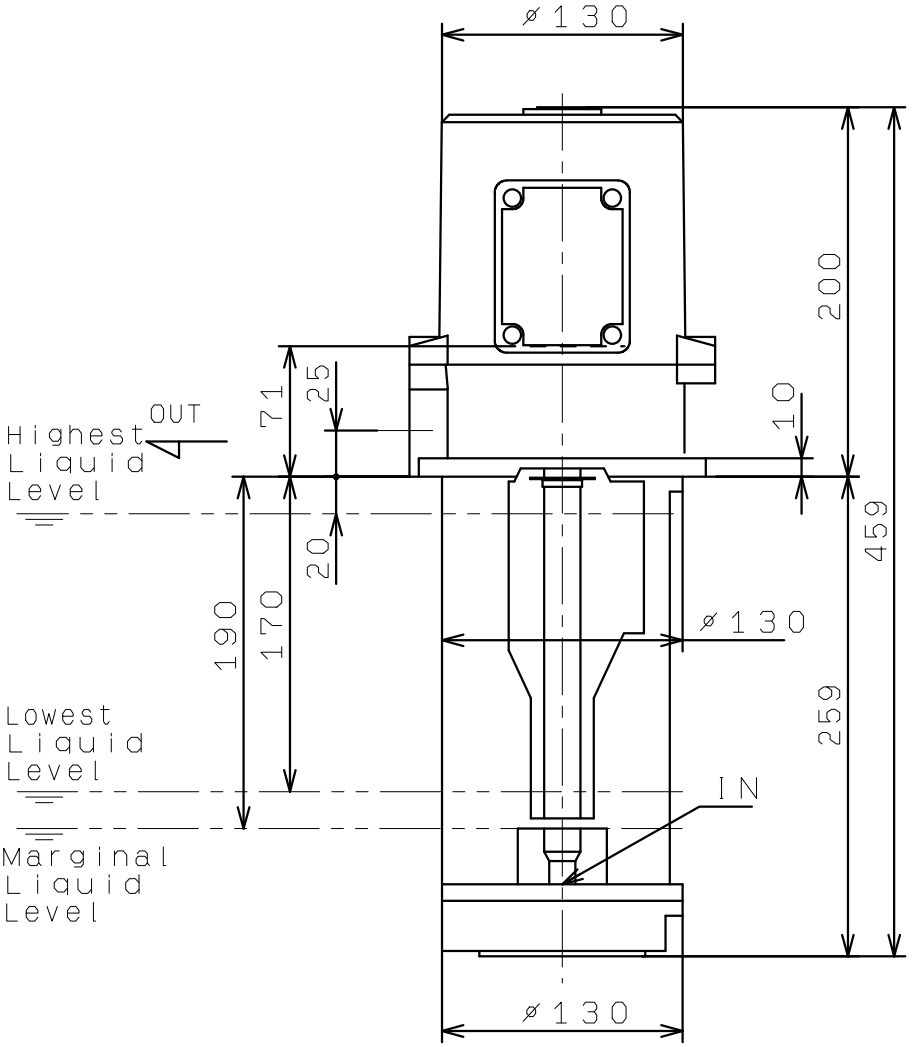
ø130
200
71
25
OUT
Highest
Liquid
Level
10
459
20
190
170
ø130
259
Lowest
Liquid
Level
IN
Marginal
Liquid
Level
ø130