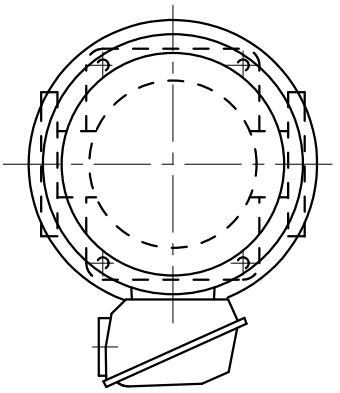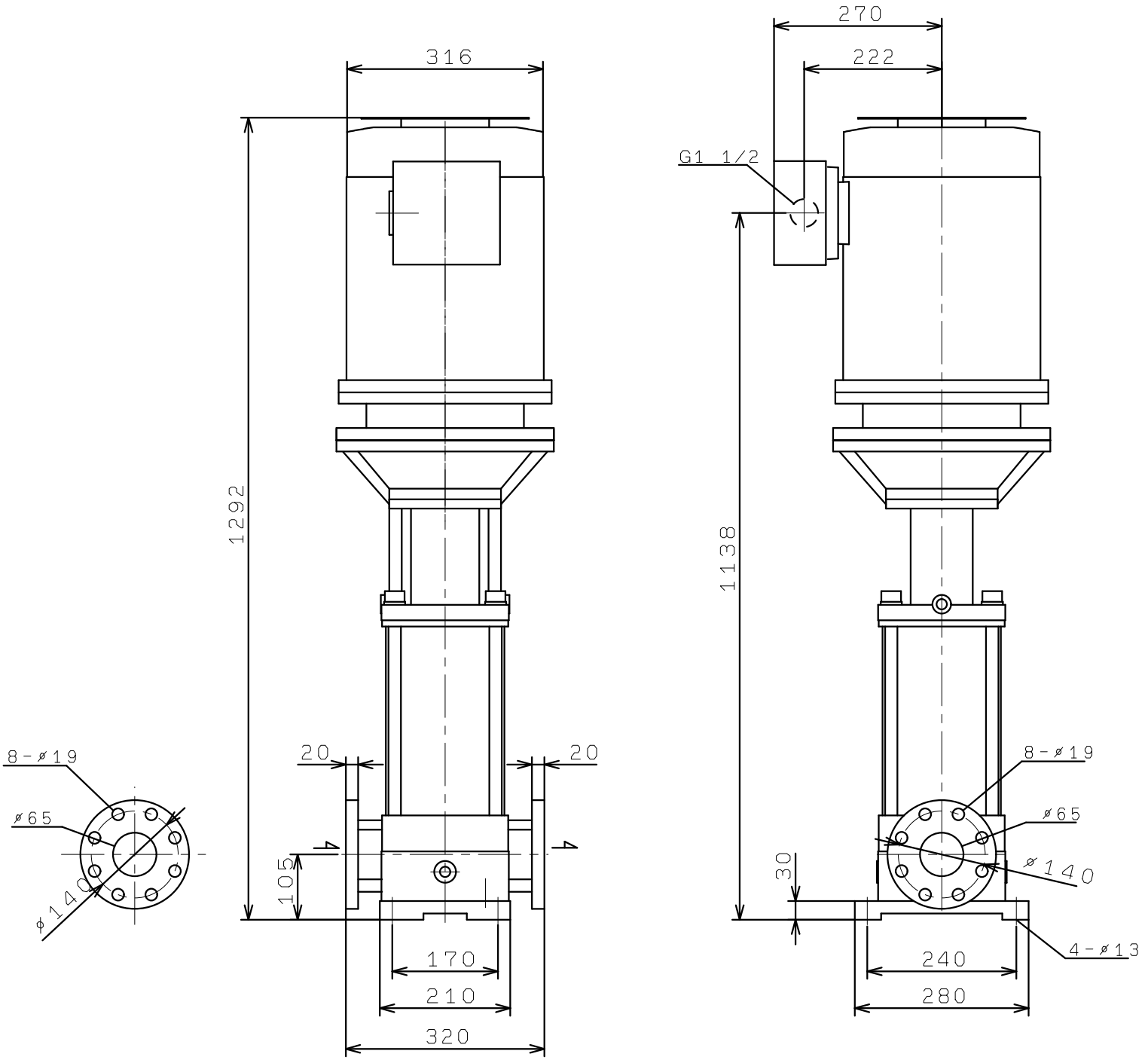KVS656ME18
(VC30)