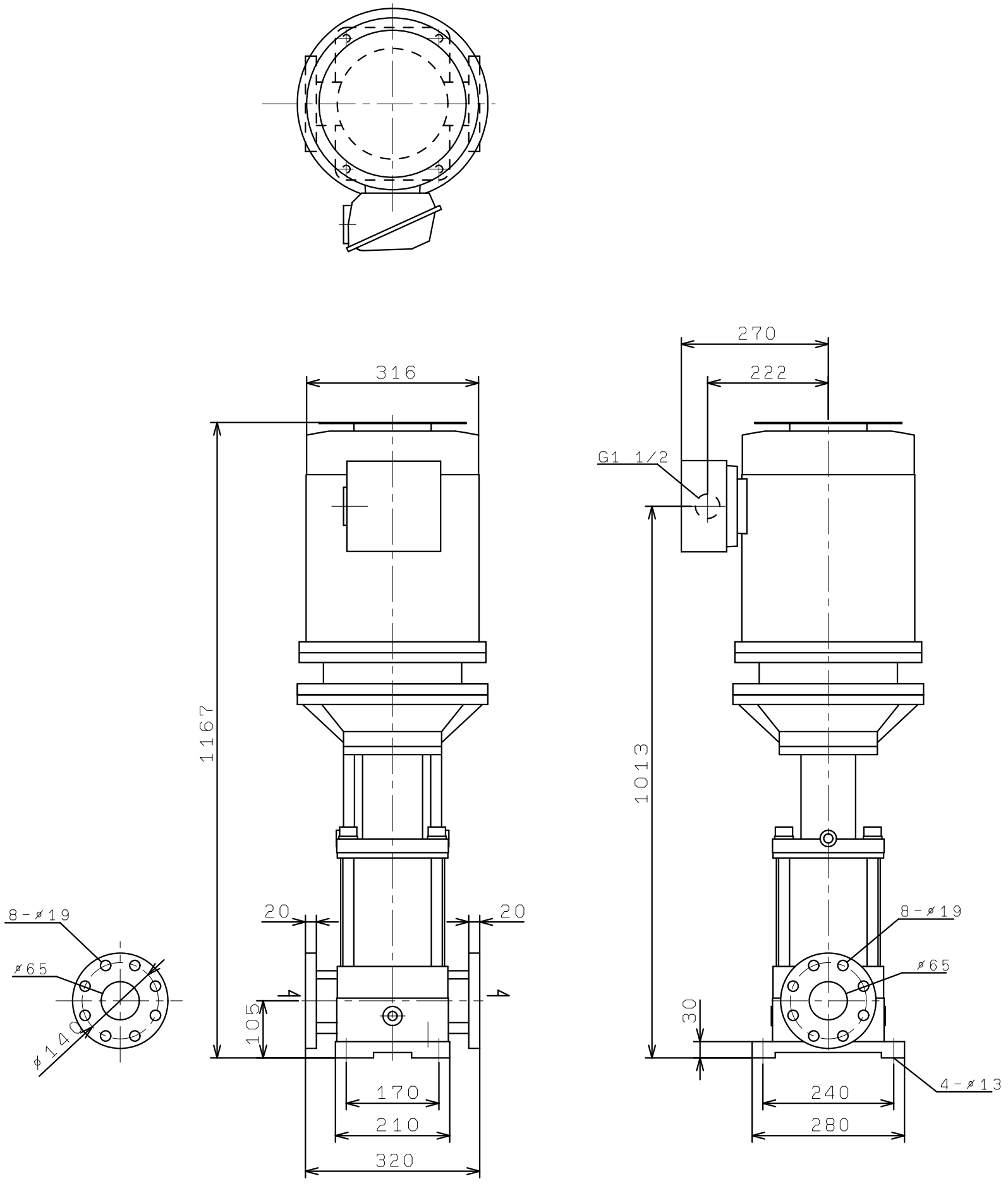KVS656ME11
(VC30)