KVS655ME7.5

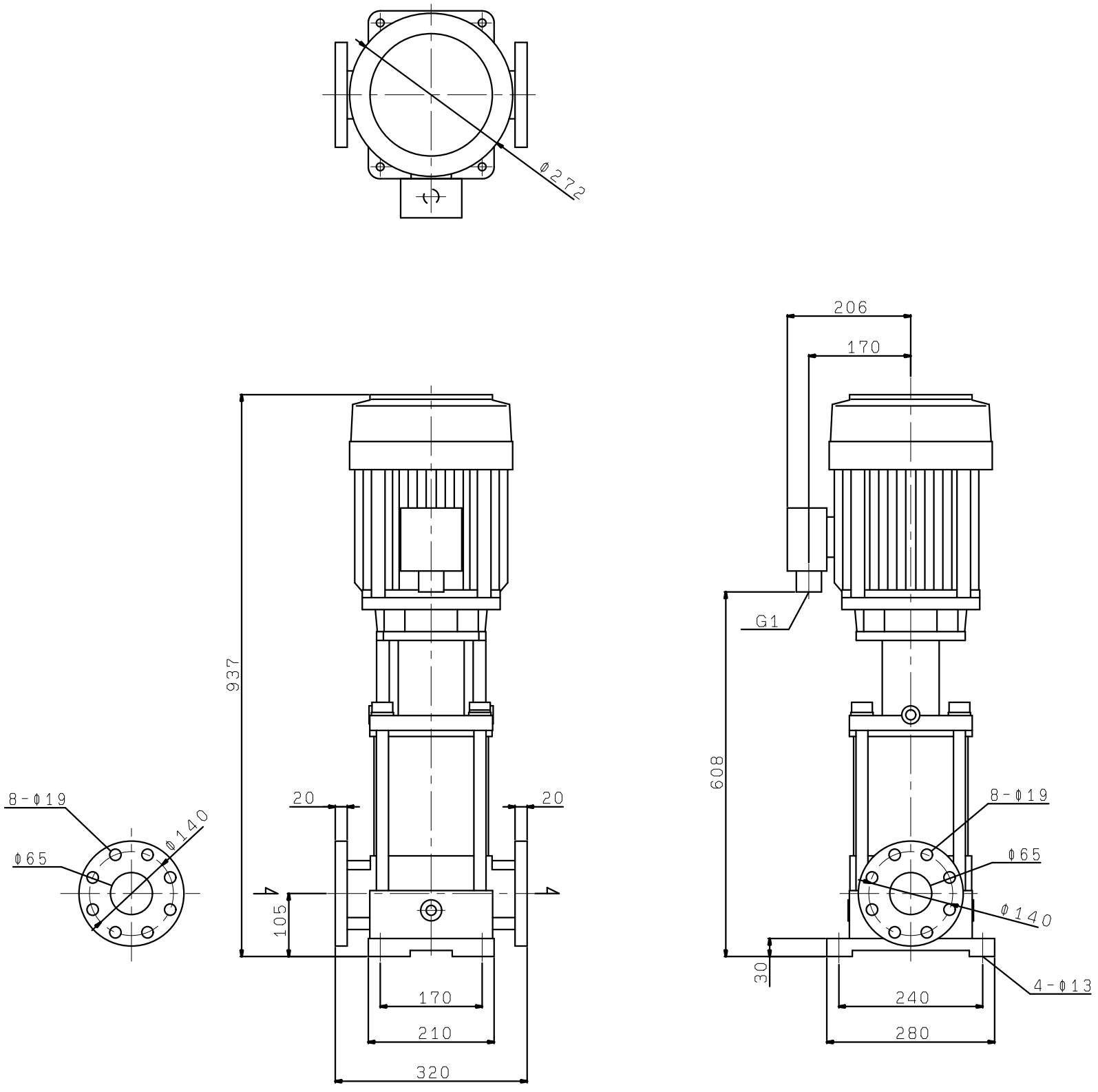
Φ272
206
170
937
G1
608
8-Φ19
Φ65
Φ140
20
20
105
30
170
210
320
240
280
4-Φ13