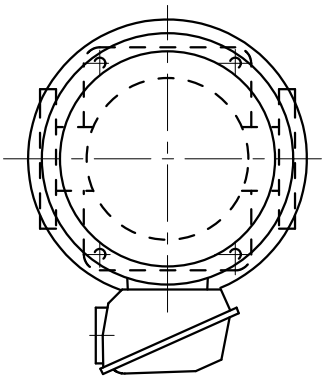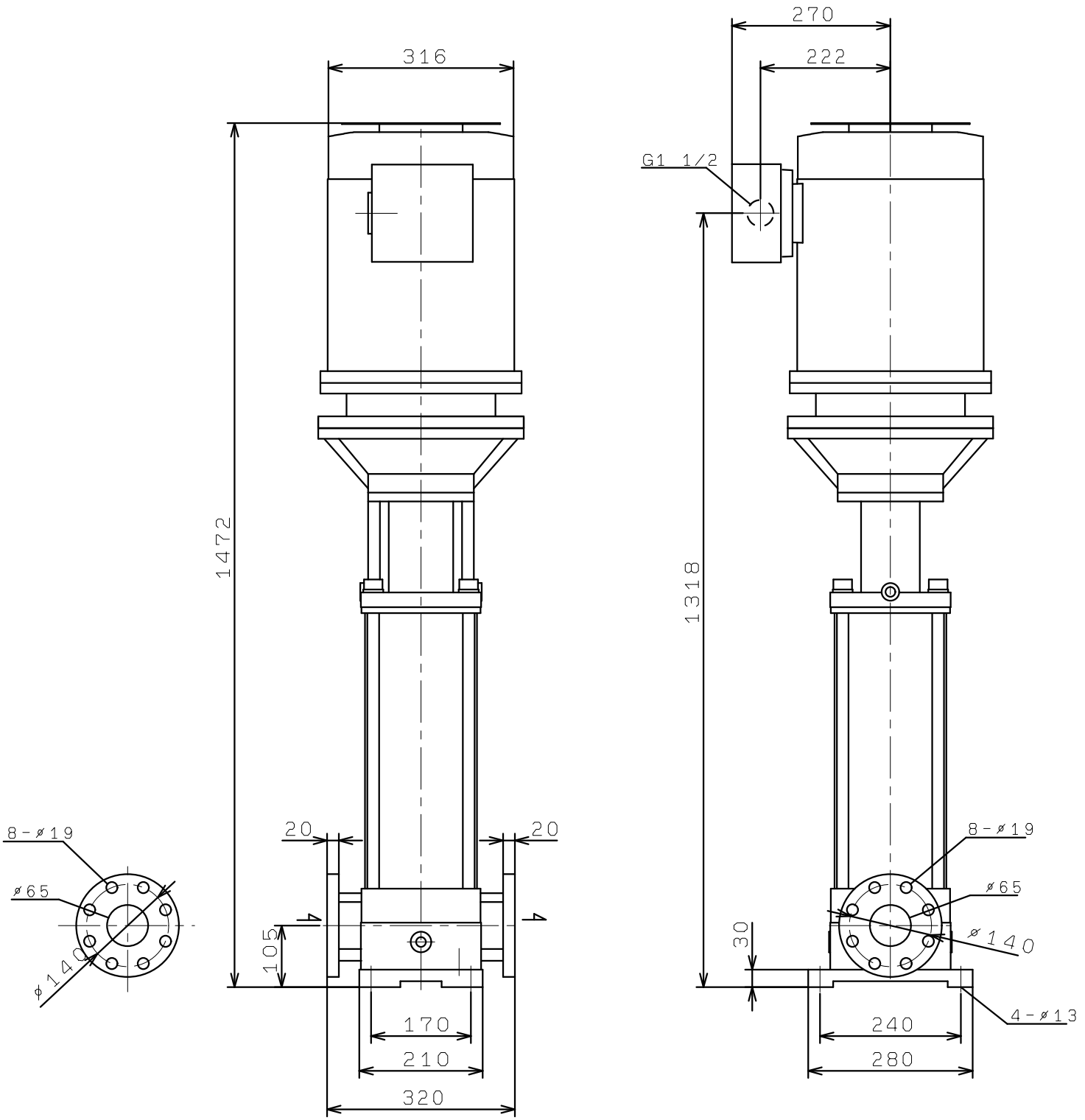KVS655ME18
(VC30)