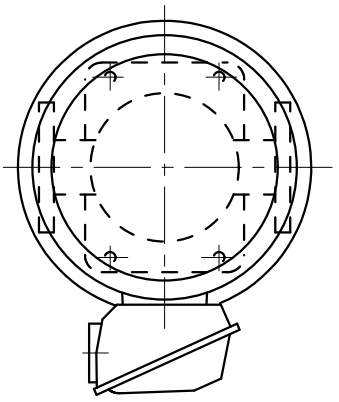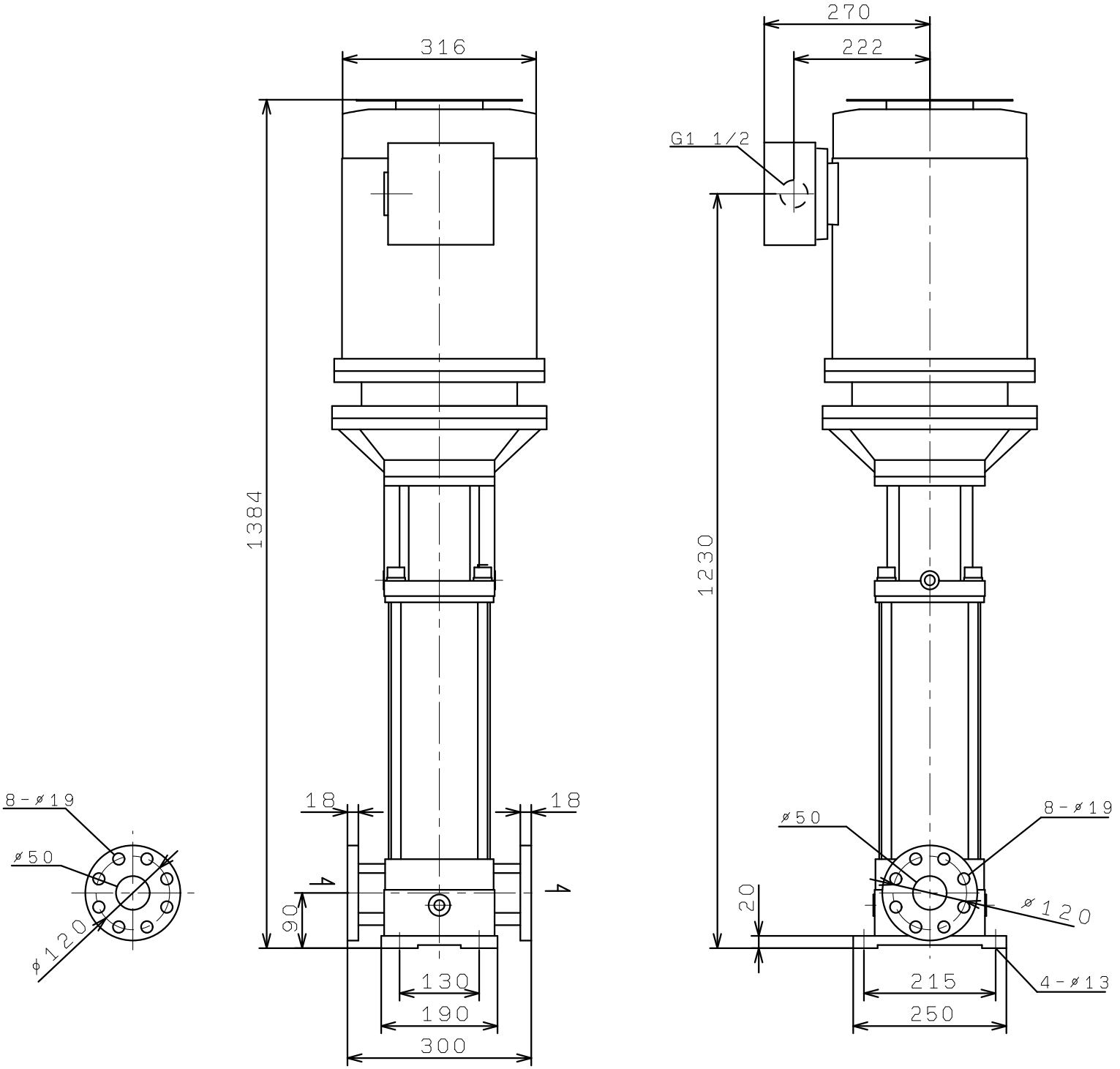# KVS506HME18
# (VC30)