KVS505ME7.5

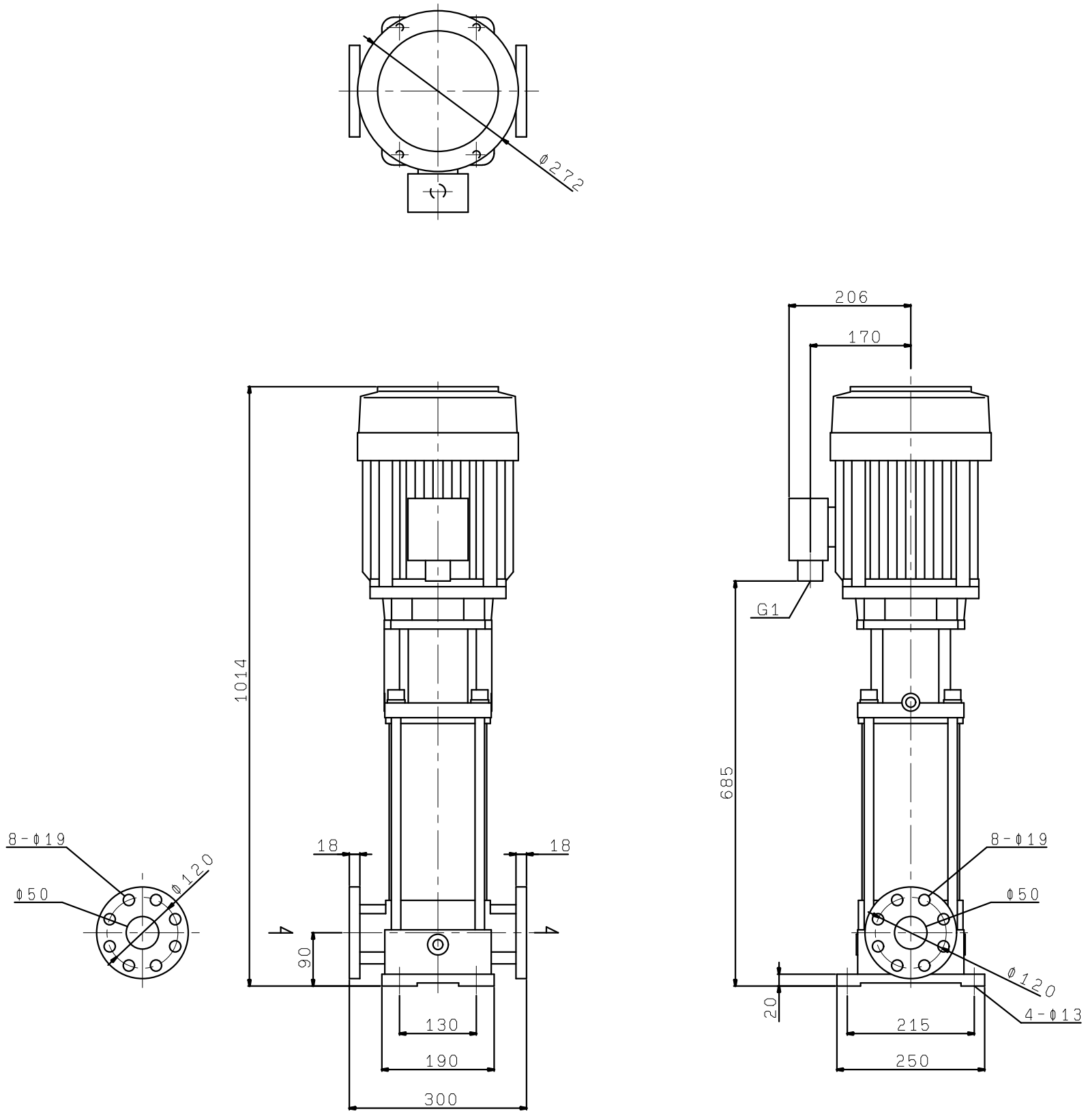
Φ272
206
170
1014
G1
685
8-Φ19
Φ50
Φ120
18
18
90
130
190
300
20
215
250
4-Φ13