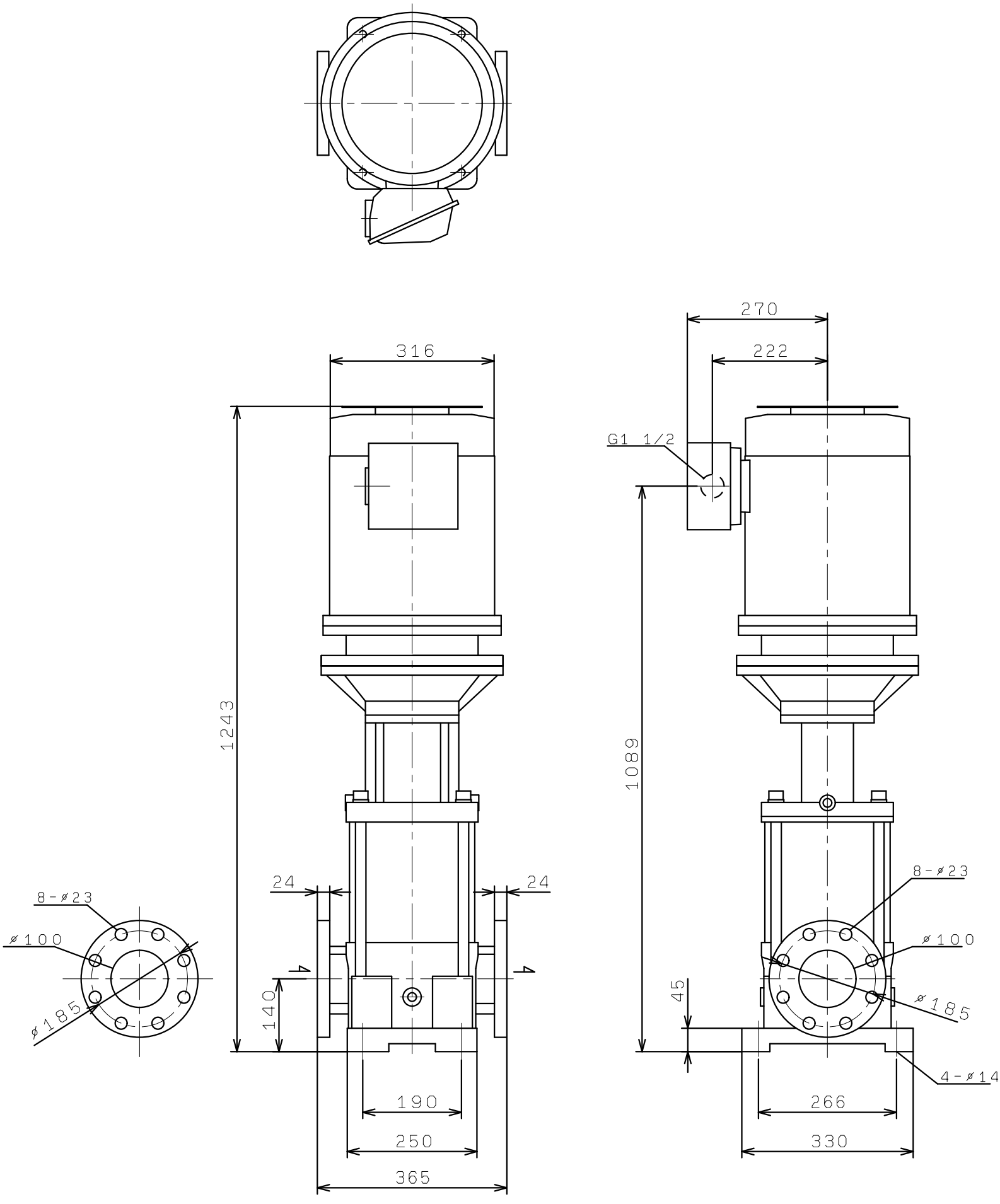KVS1005ME11
(VC30)