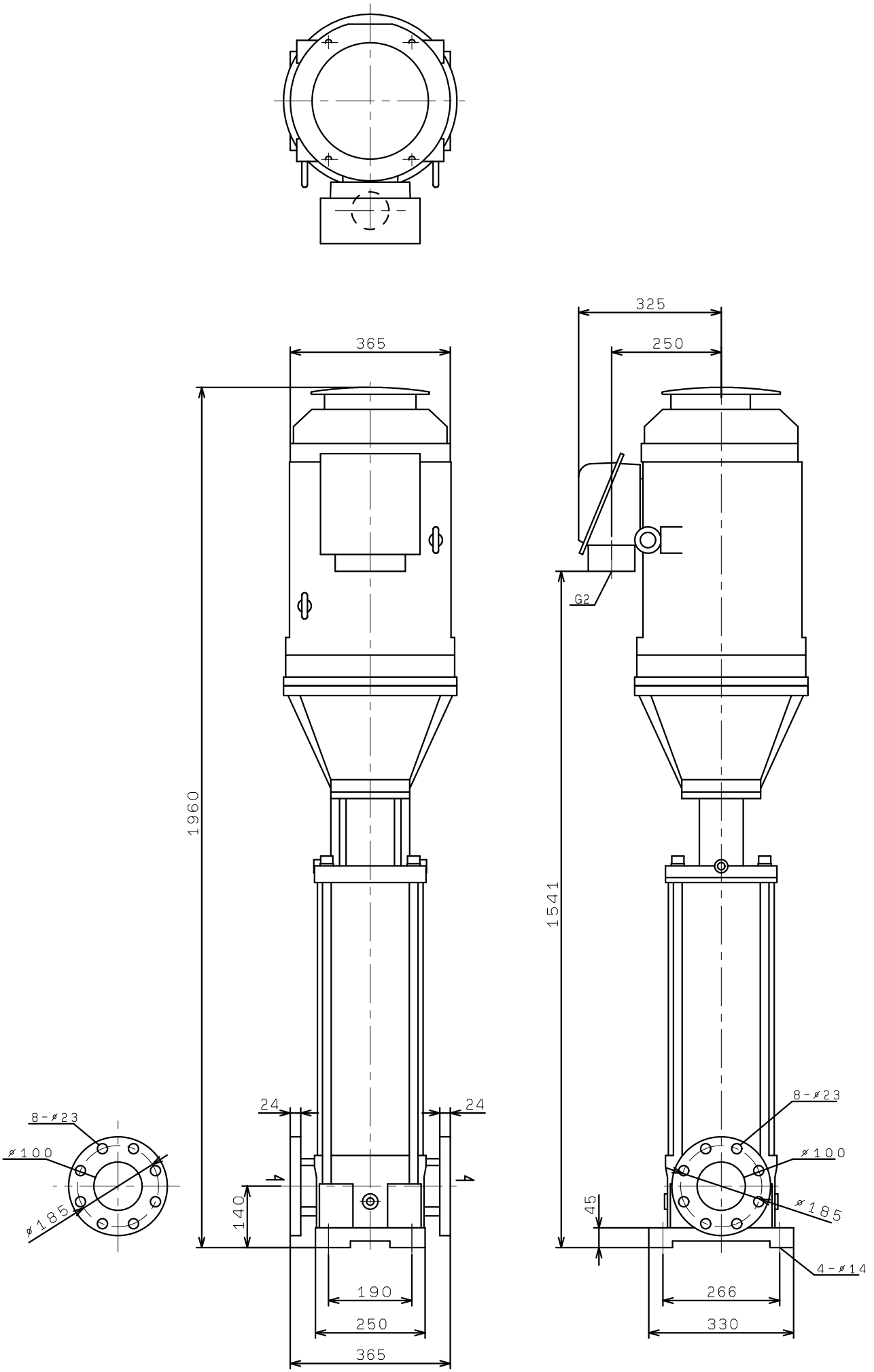KVS1005HME30
(VC30)