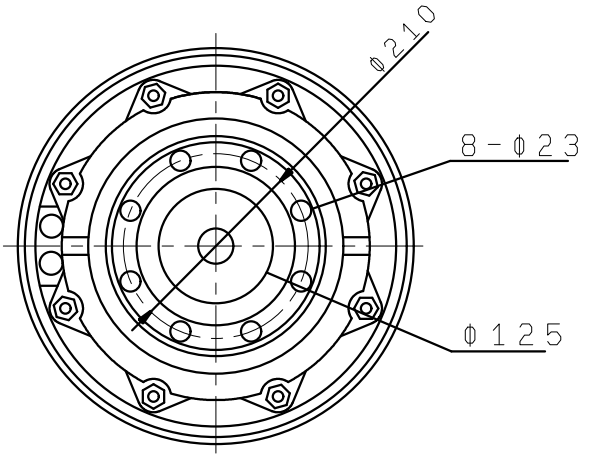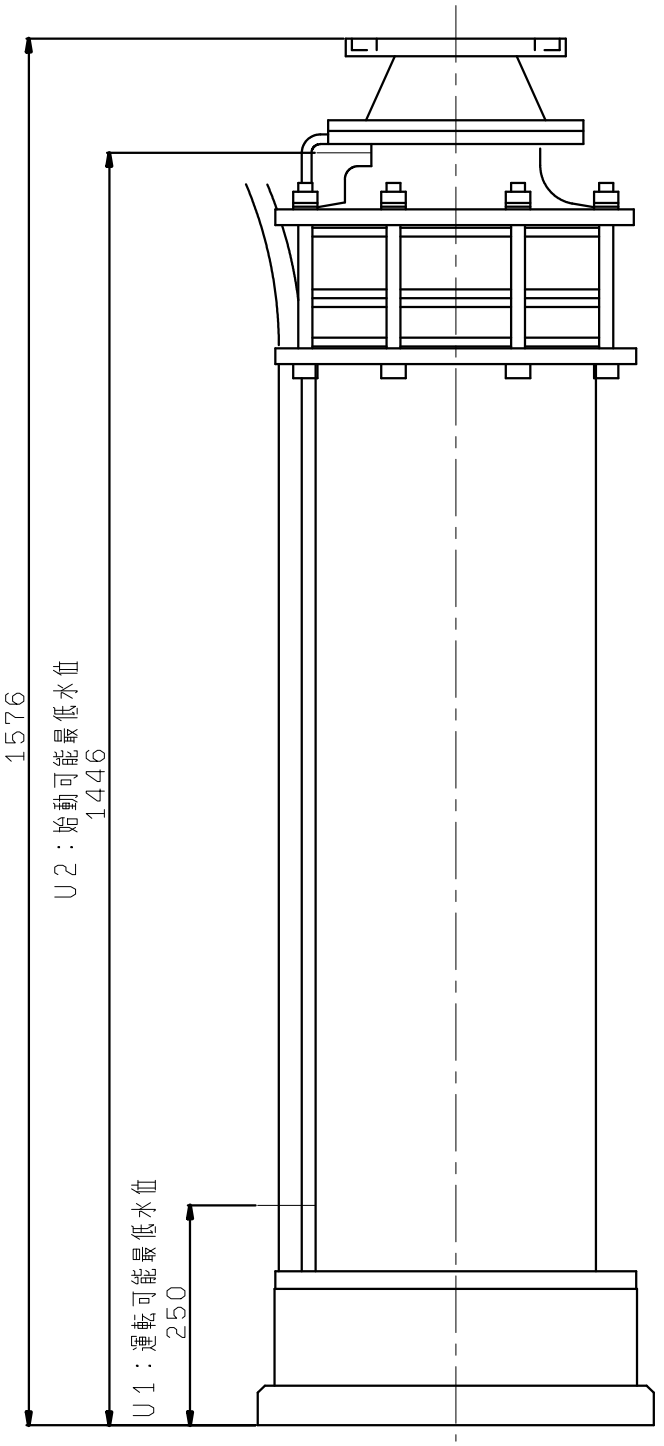KUR2-1256-45