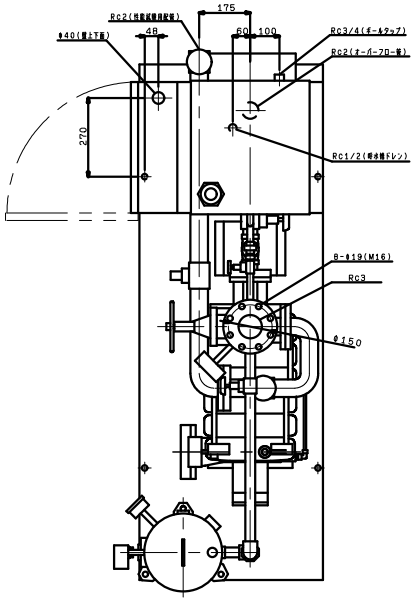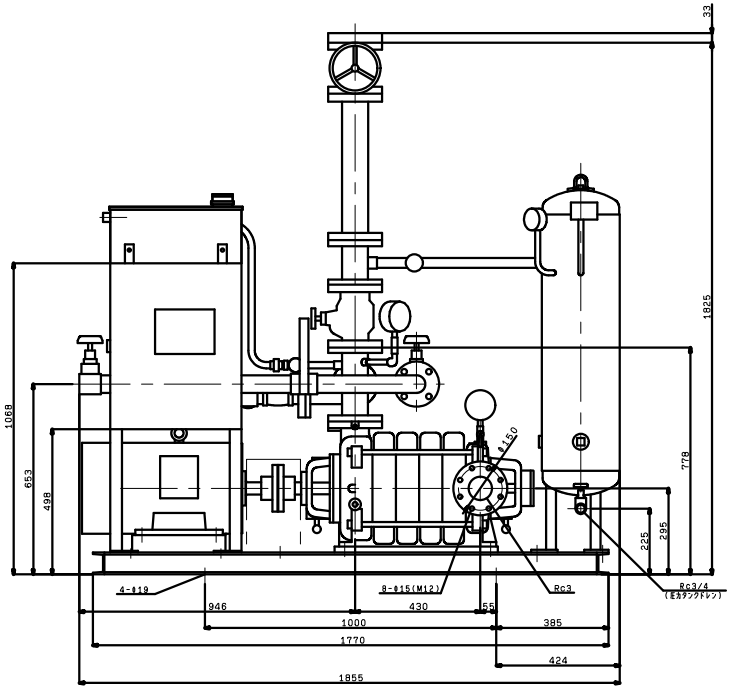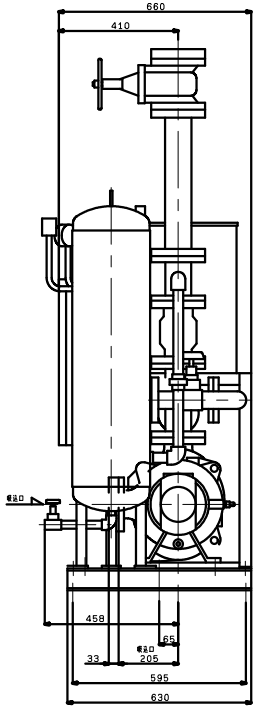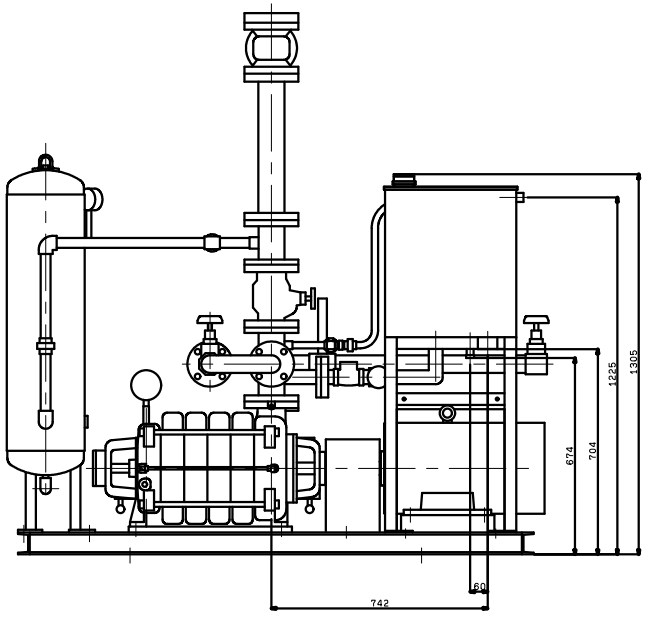KTY806B5MN18TP
VC:83