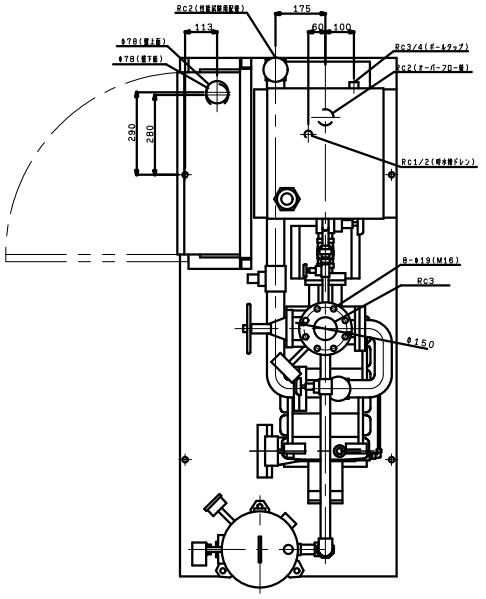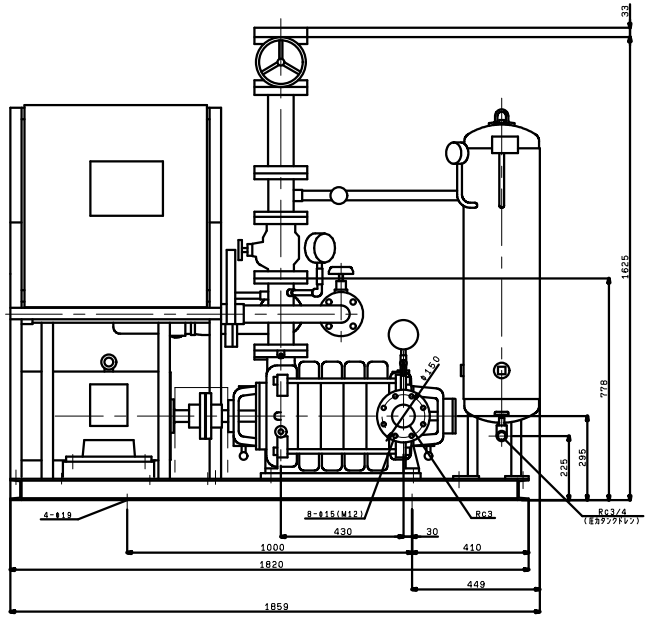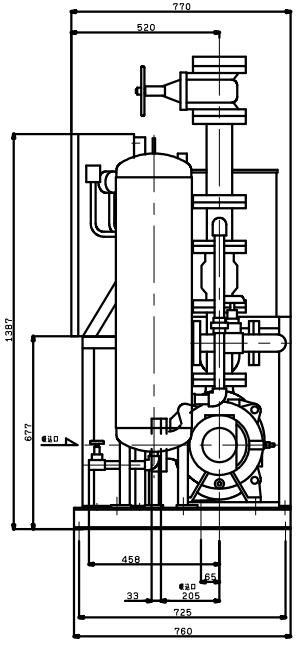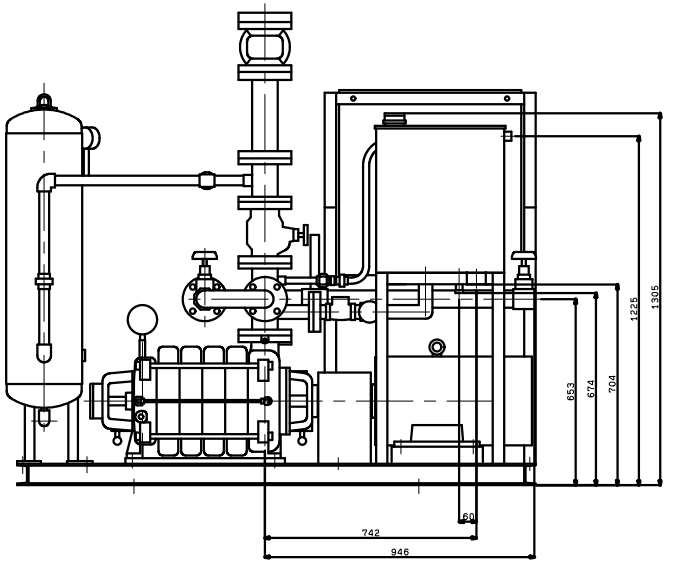KTY806B5MN18TP
VC:41/42/43/44/45