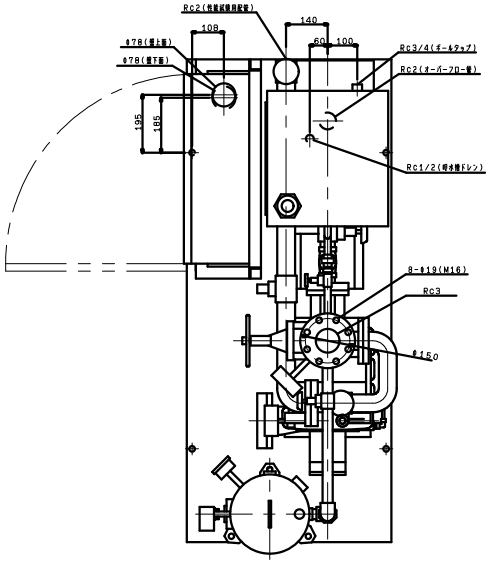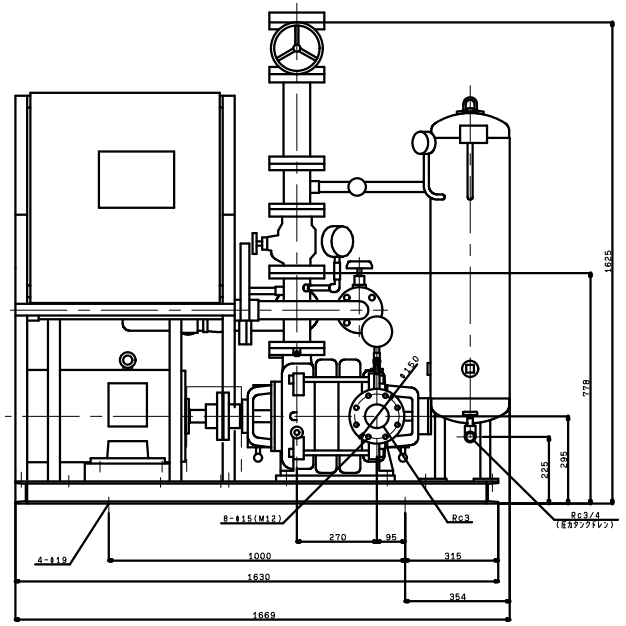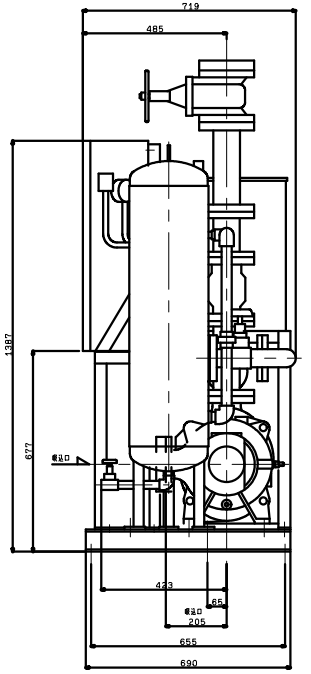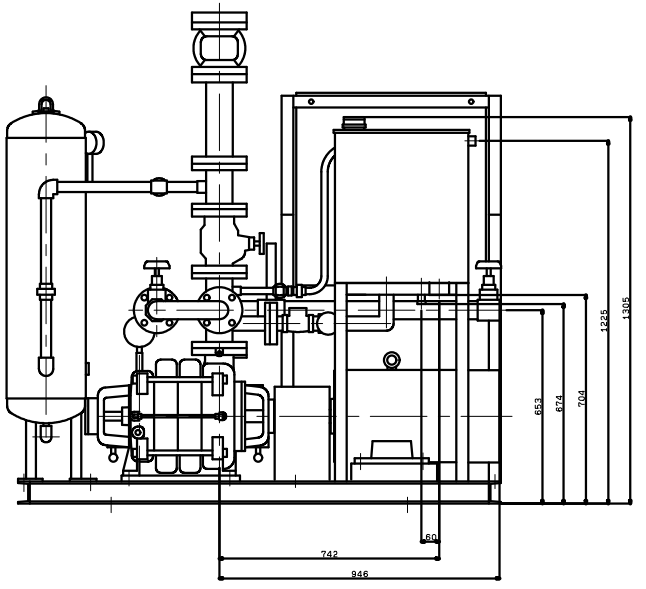KTY806B3MN11TP
VC:41/42/43/44/45