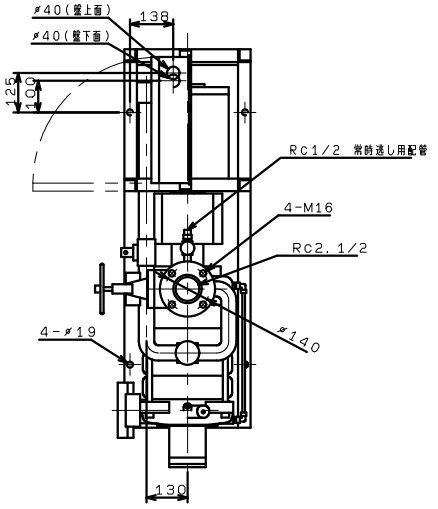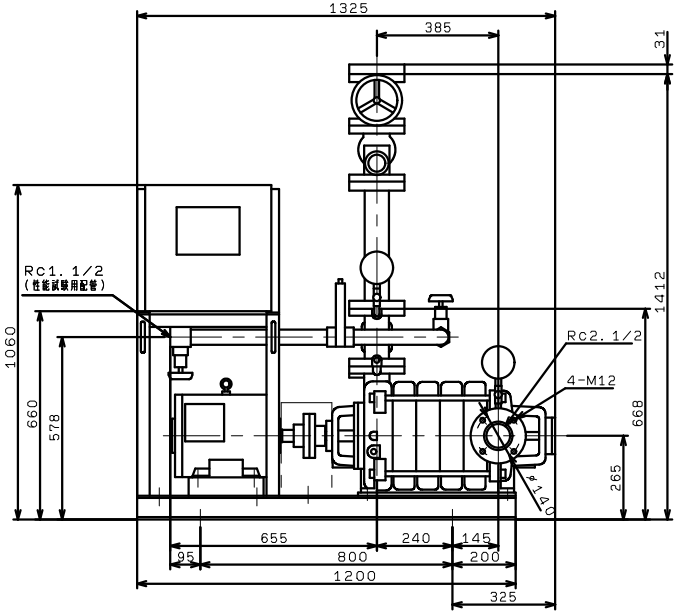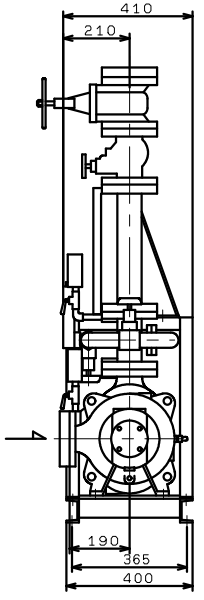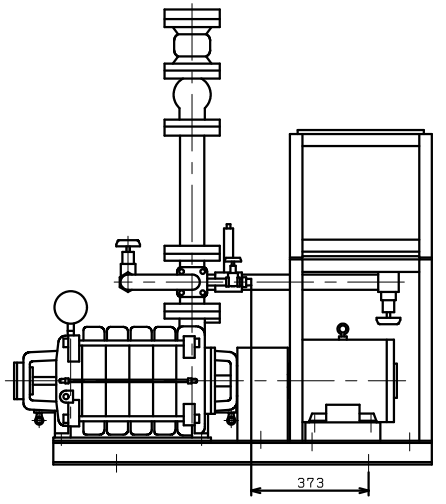KTY655A5ME7.5F
KTY656A5ME7.5F
VC:82