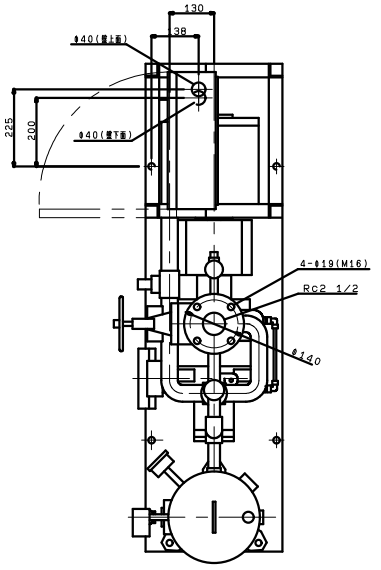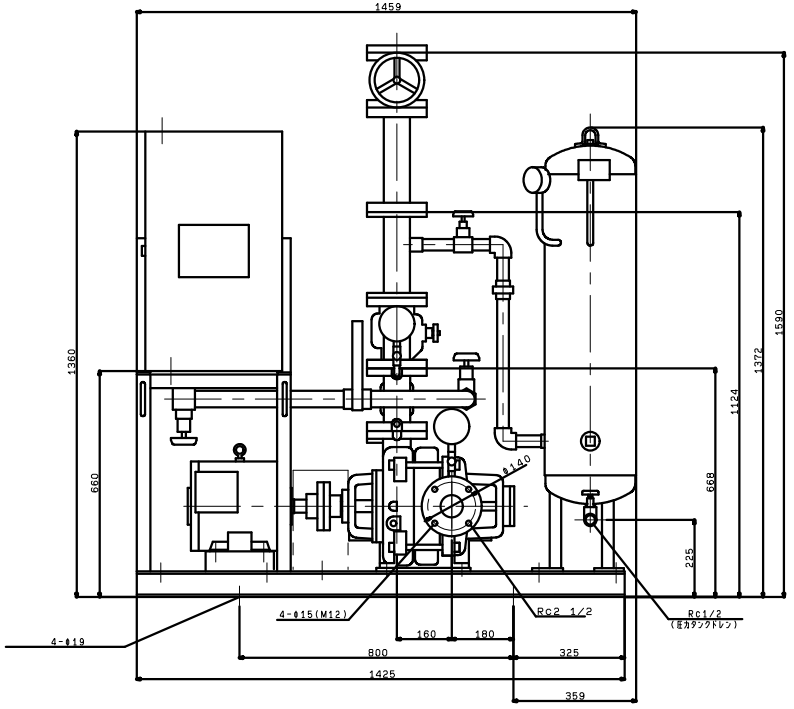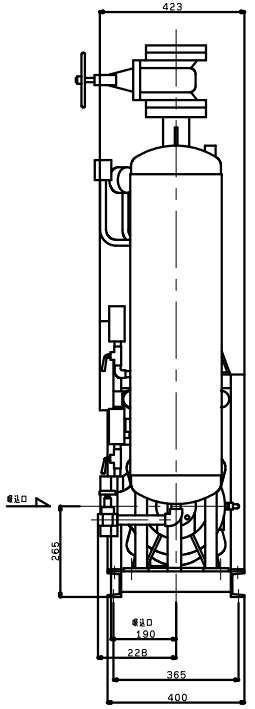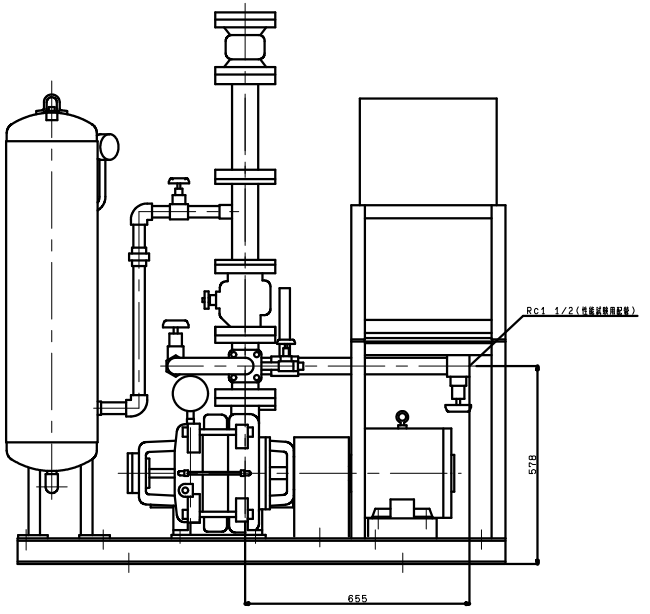KTY656A2MN5.5FP
VC:41/42/44/45