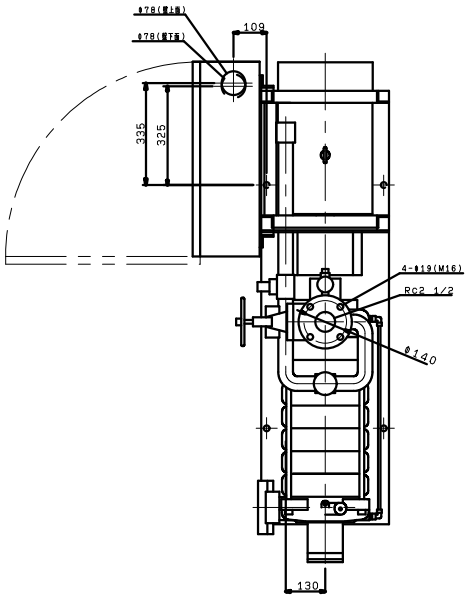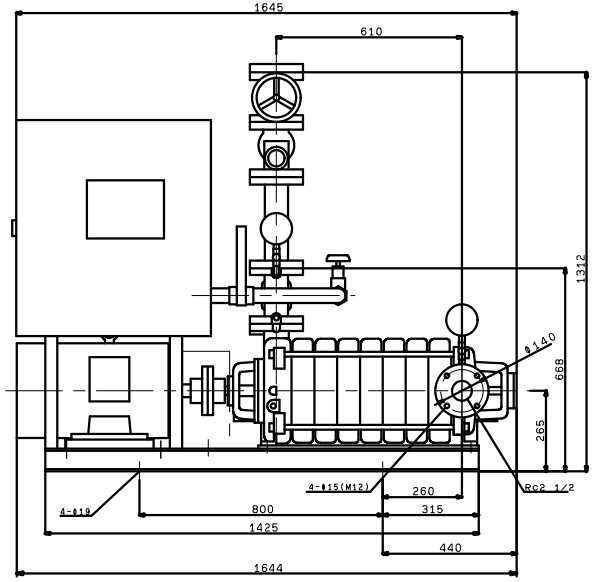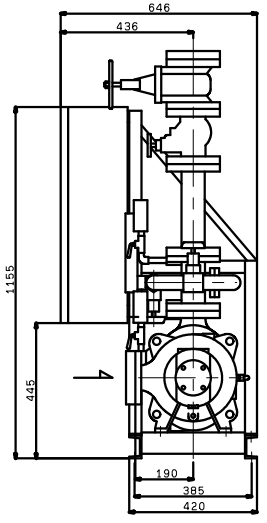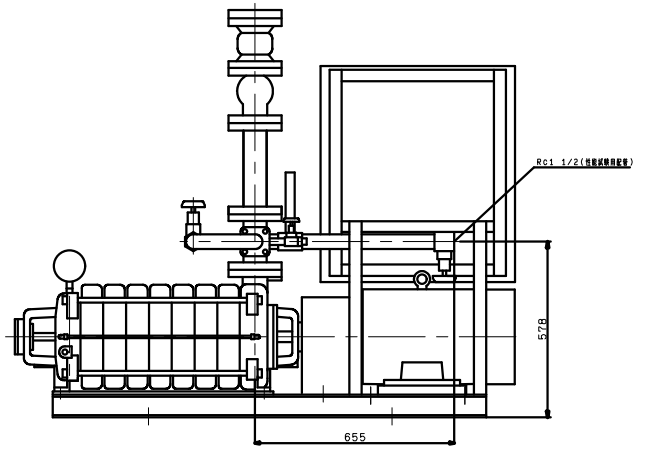KTY655A8MN11F
VC:41/42/43/44/45