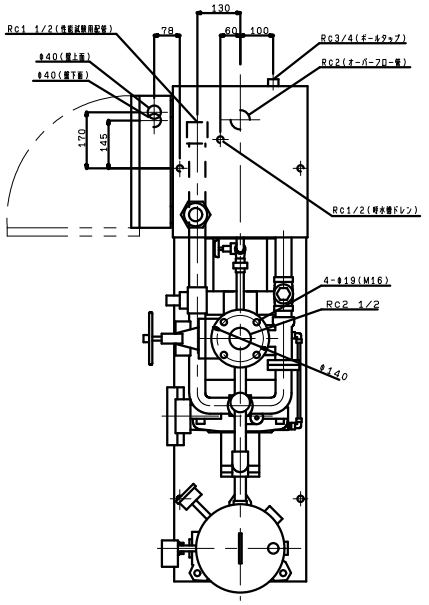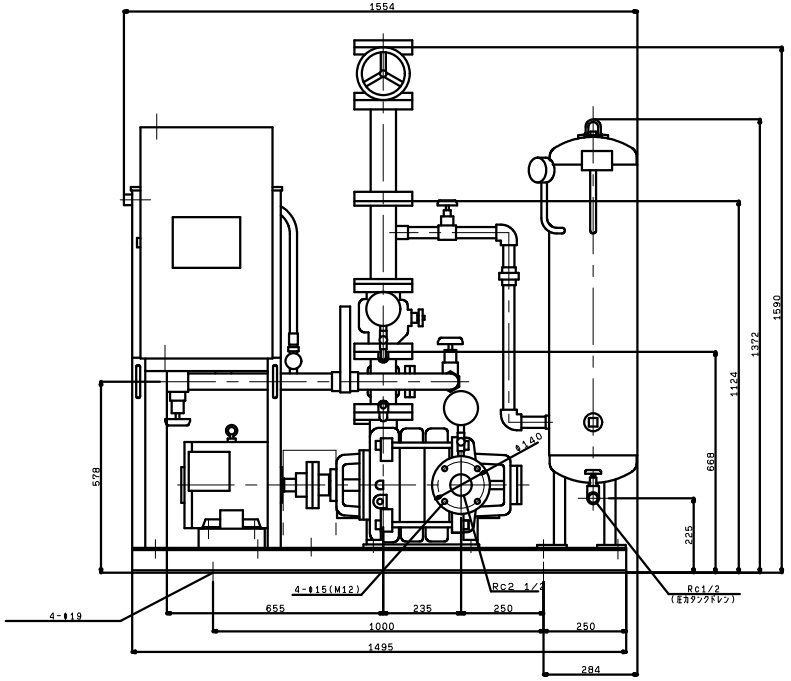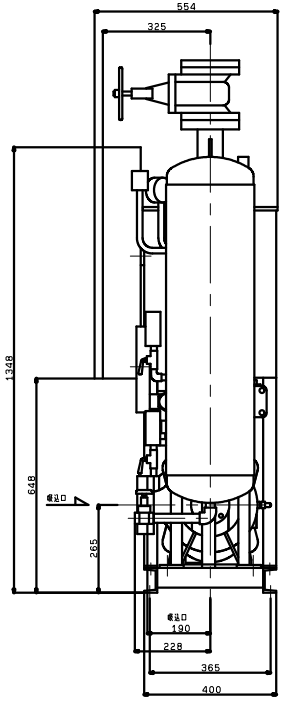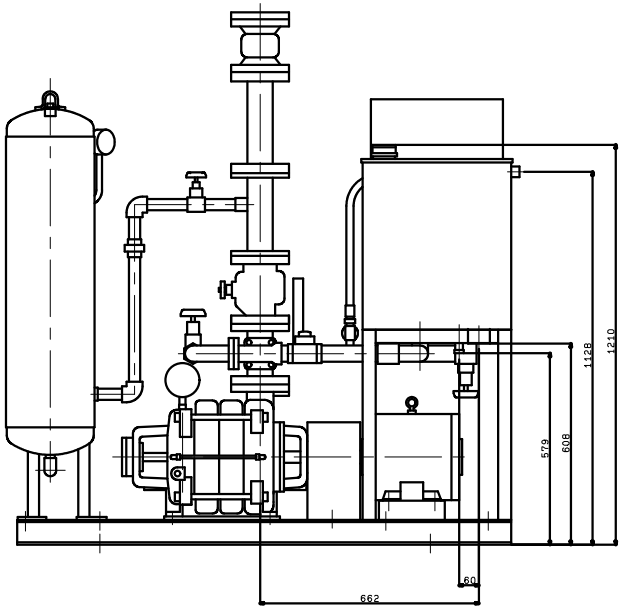KTY655A3MN5.5TP
VC:41/42/44/45