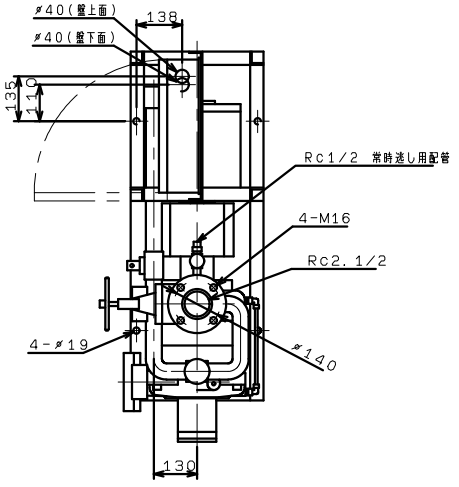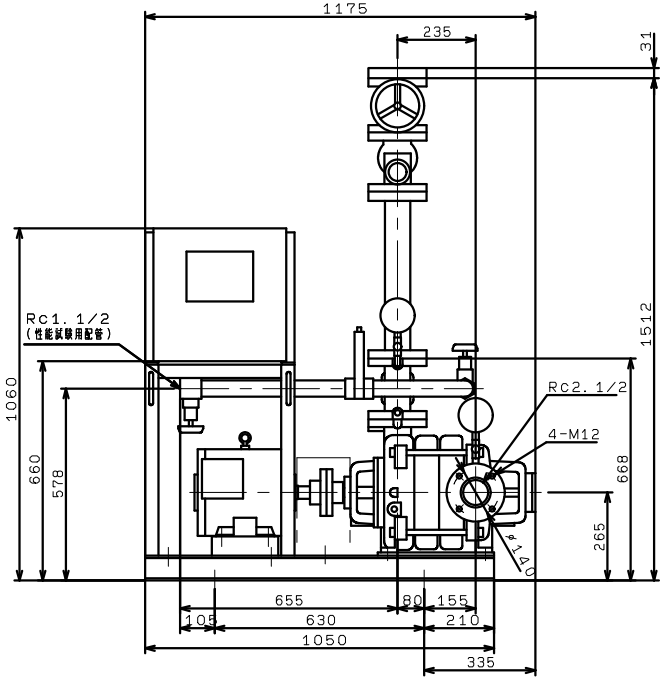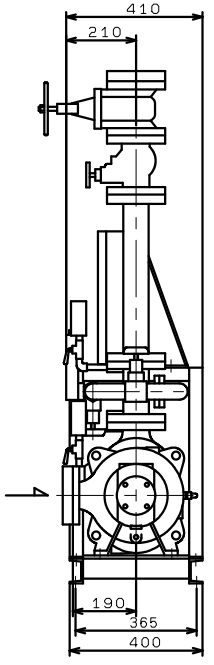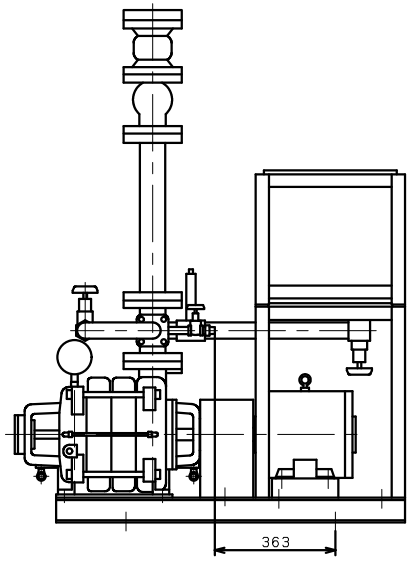KTY655A3ME5.5F
VC:83