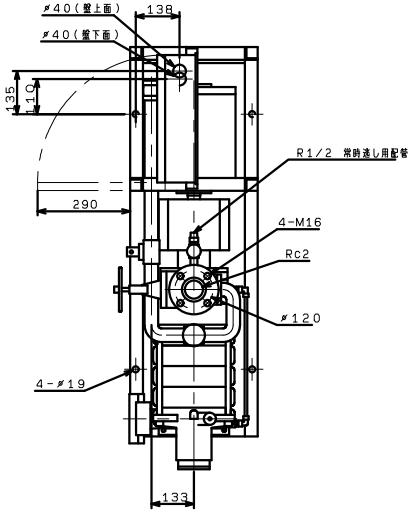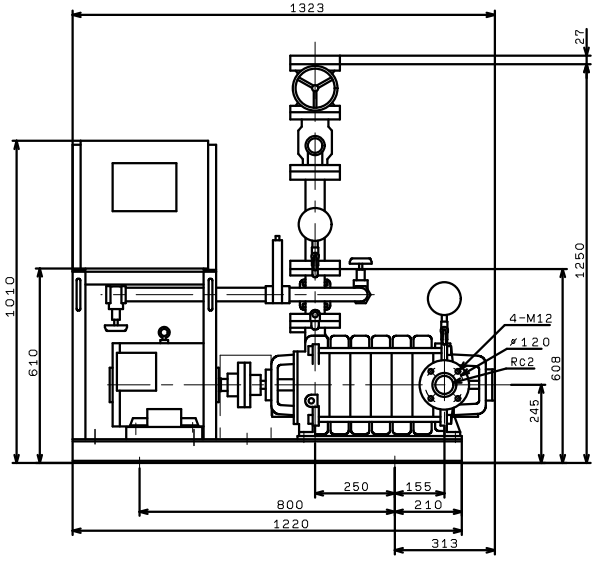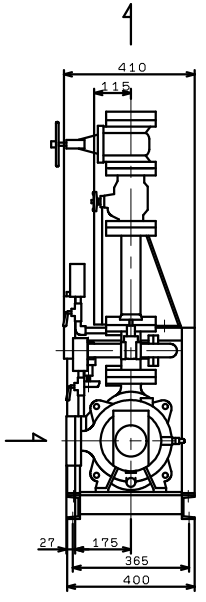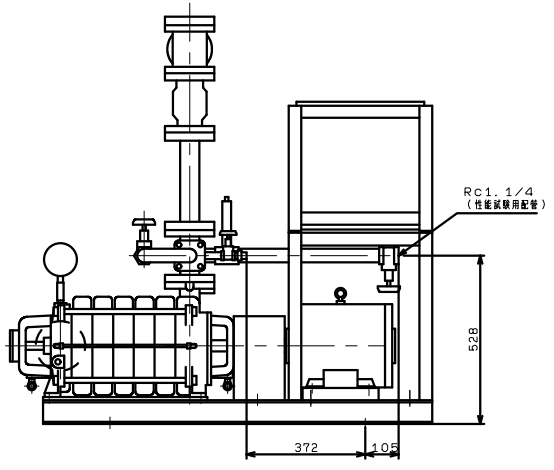KTY506A6ME7.5F
VC90