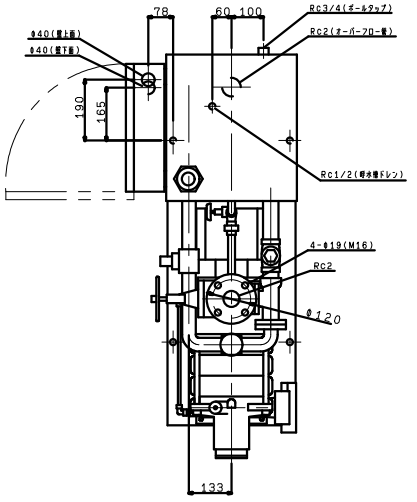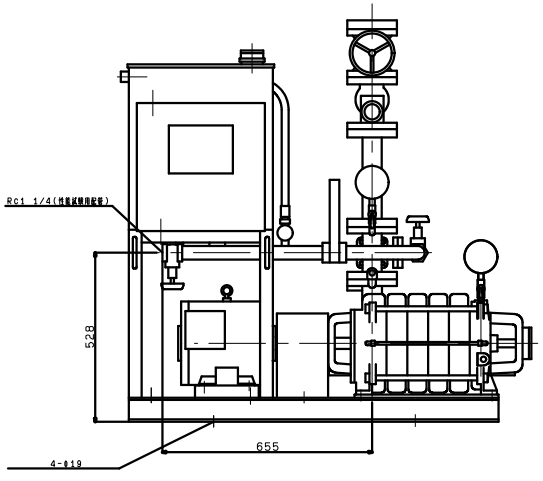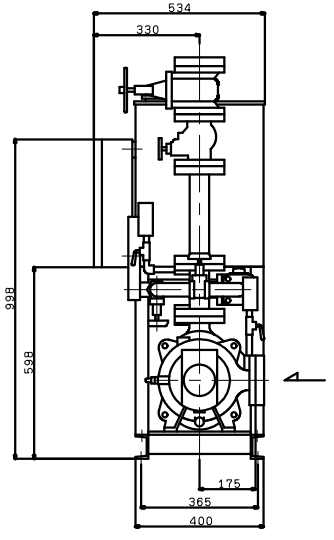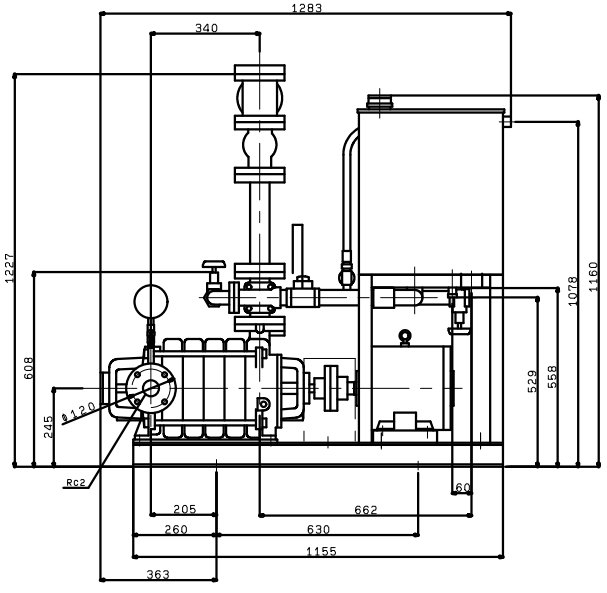KTY505A5MN5.5T
VC:81