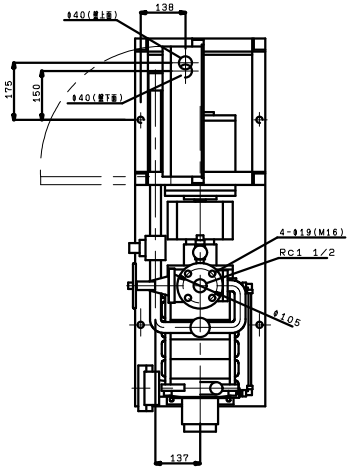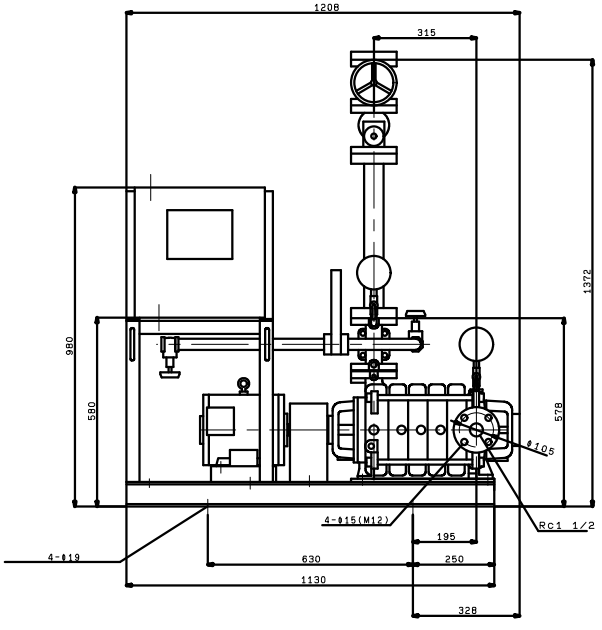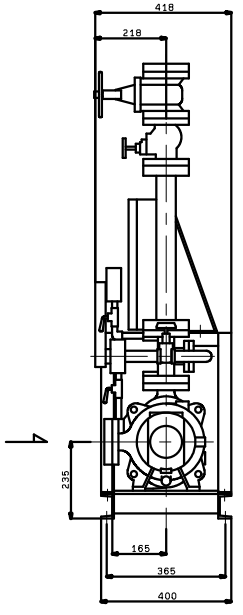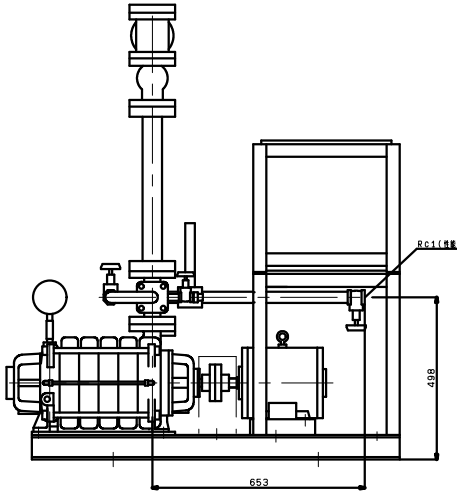KTY405A5MN3.7F
KTY406A5MN3.7F
VC:83