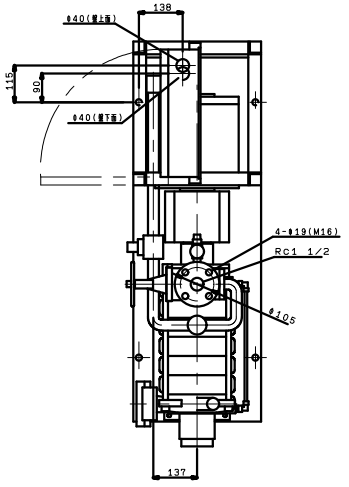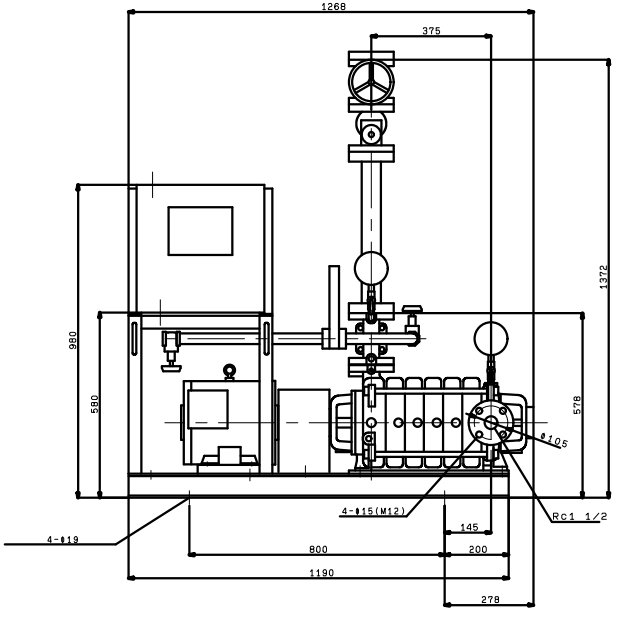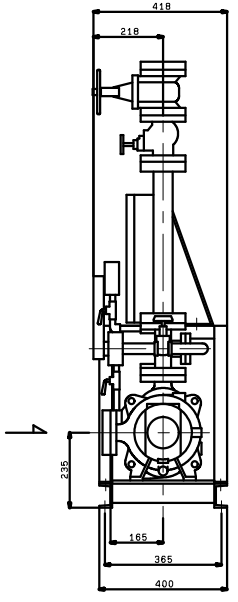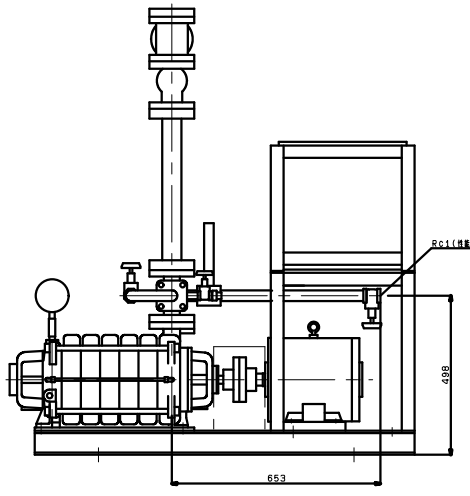KTY406A6MN5.5F
VC:83