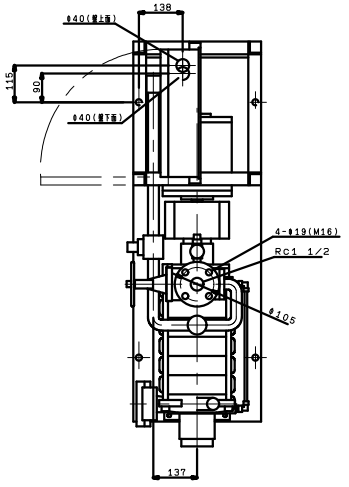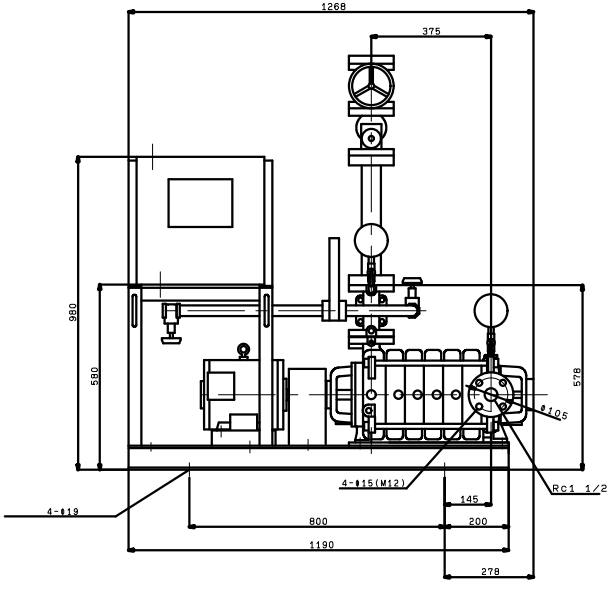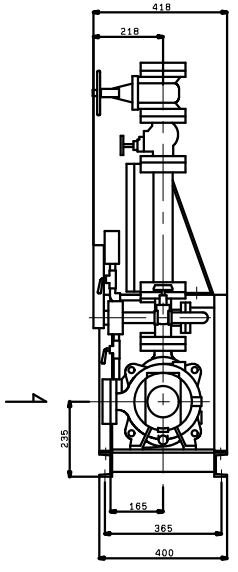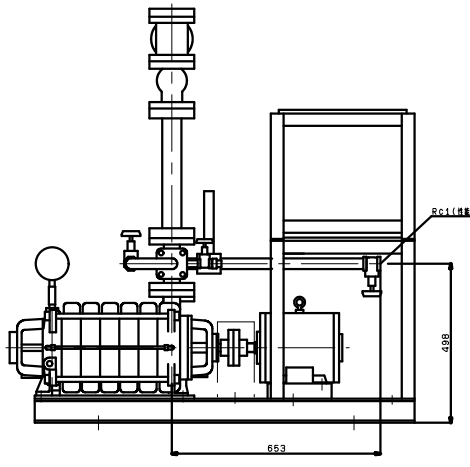KTY405A6MN3.7F
VC:82