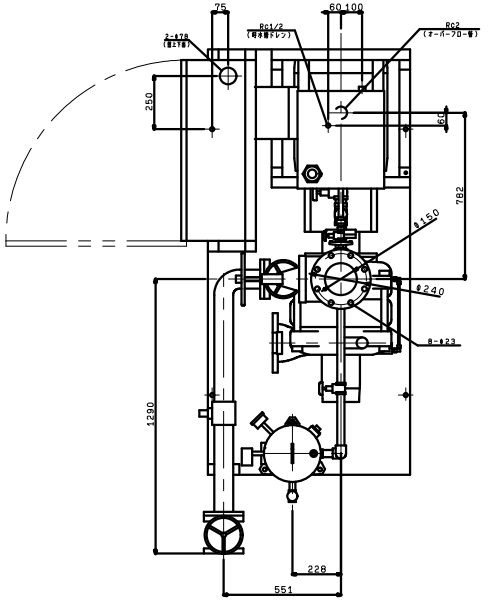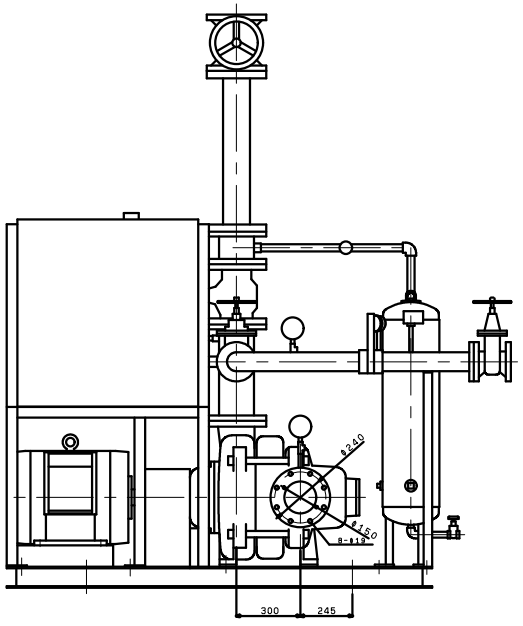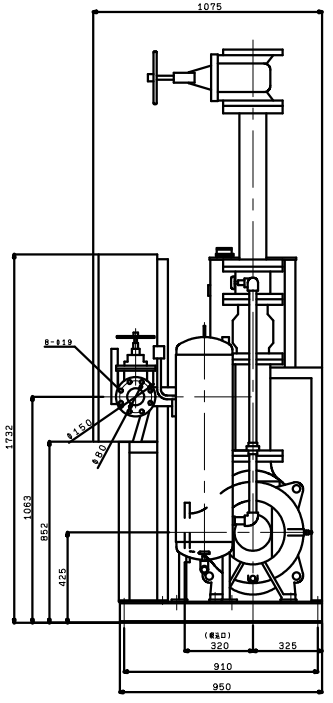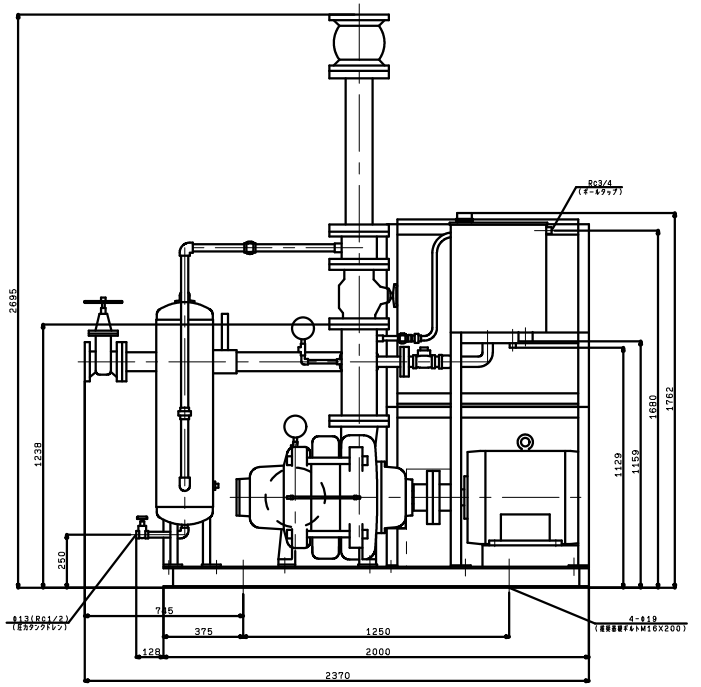KTY1506A2M75TP
VC:85