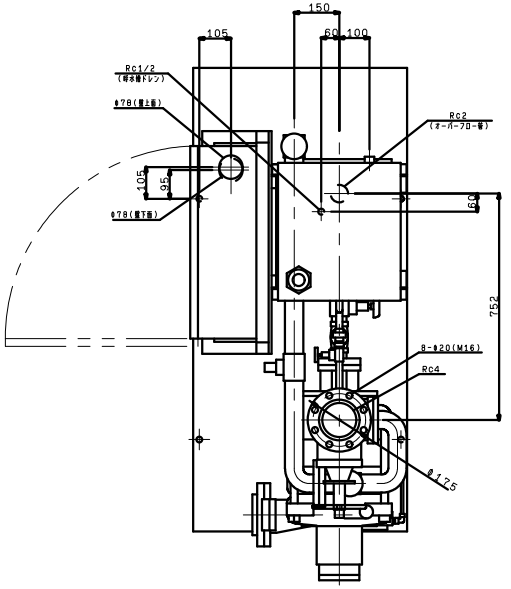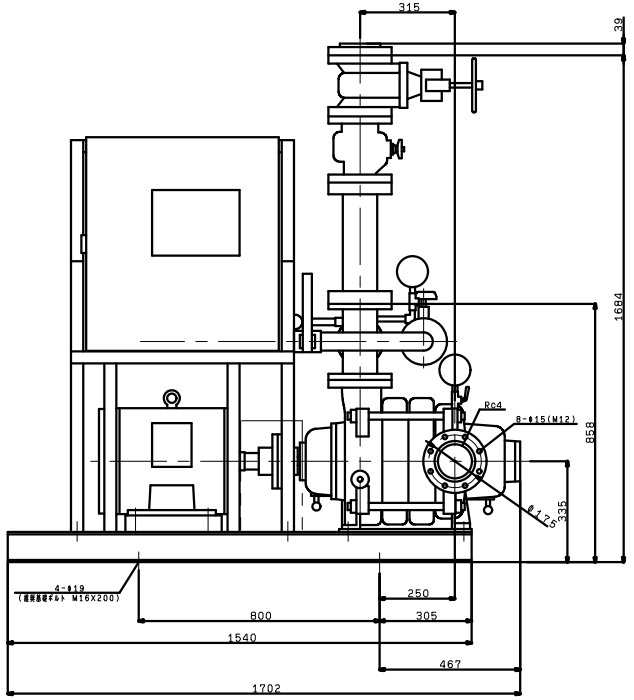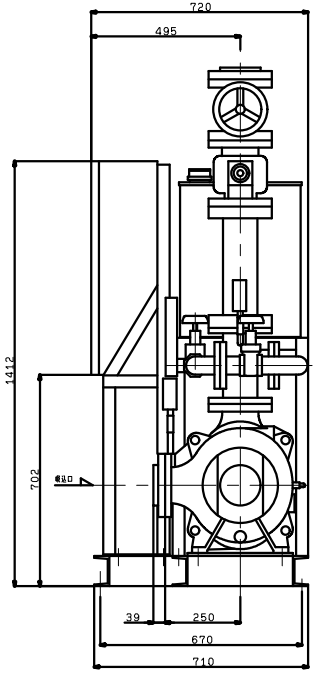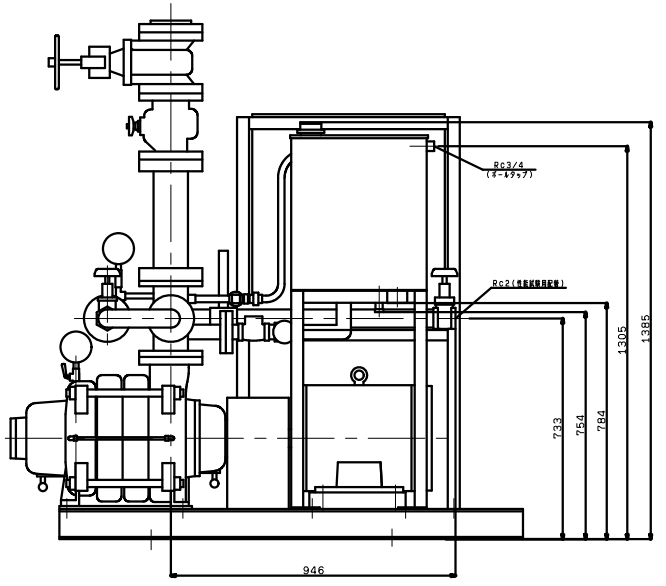KTY1006A3M30T
VC90