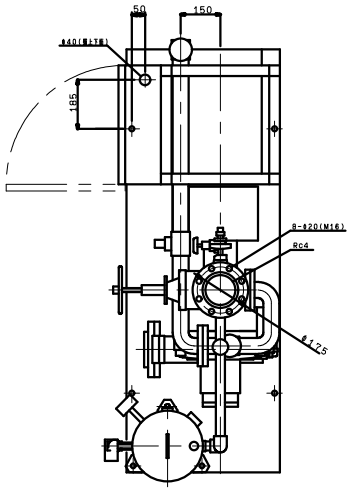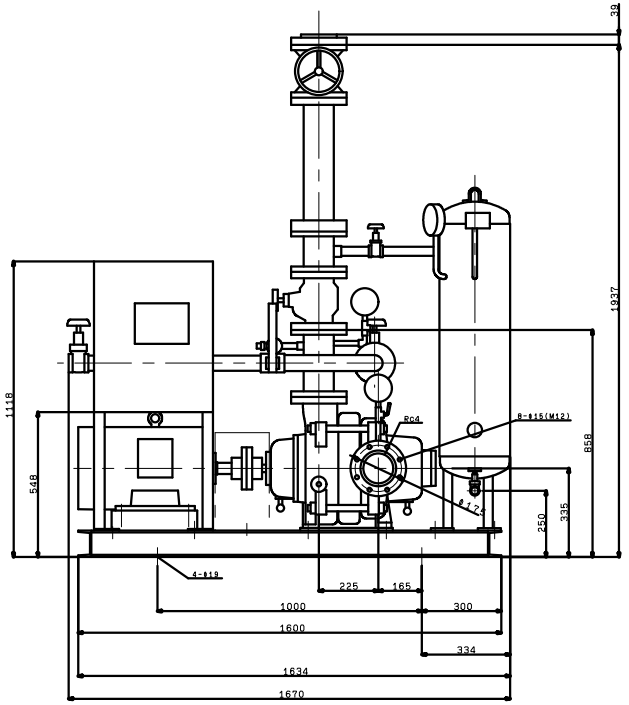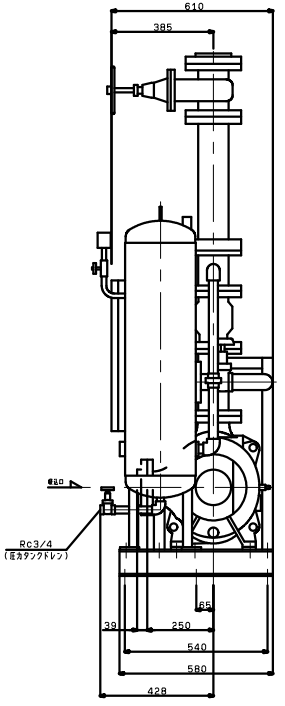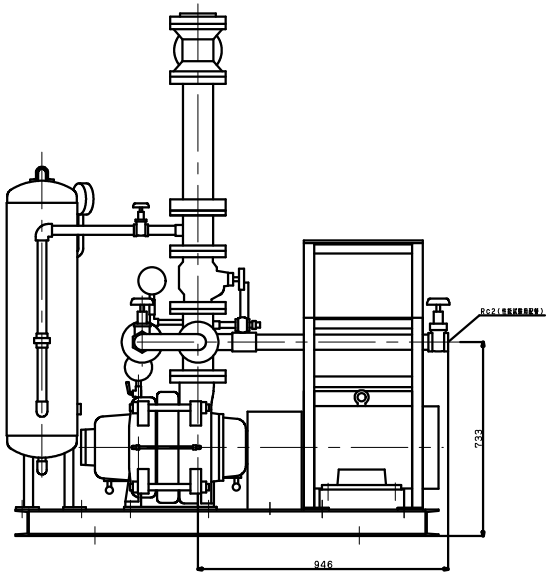KTY1006A2MN15FP
VC83