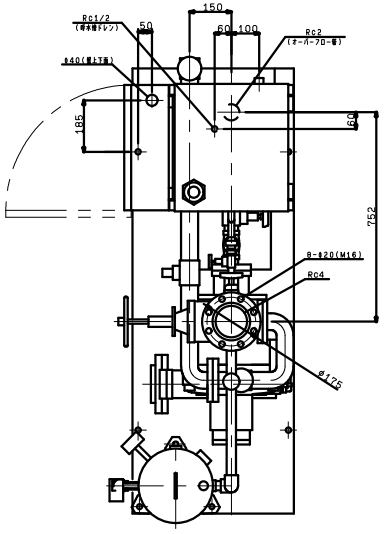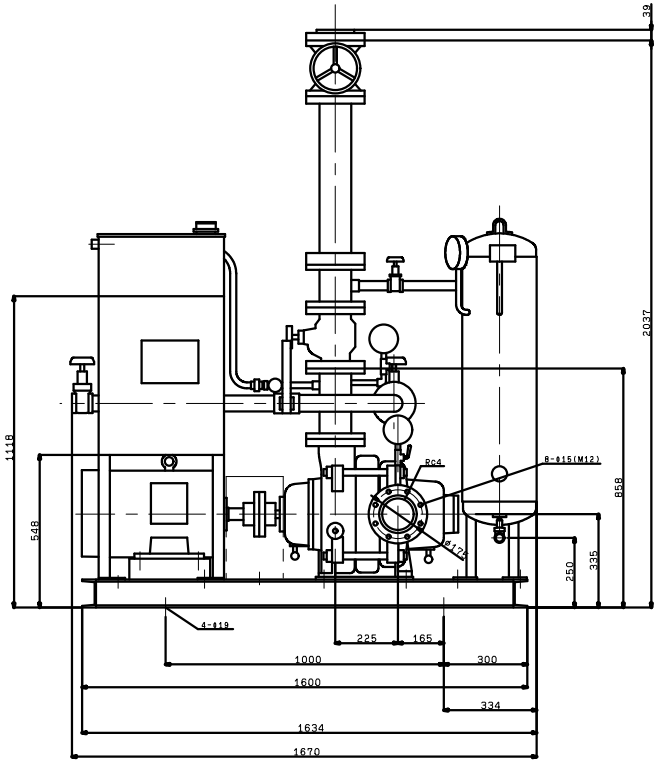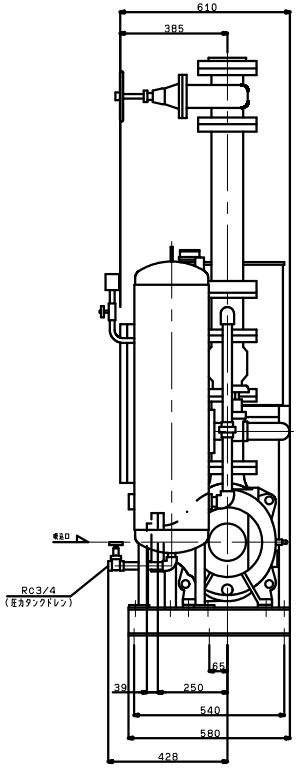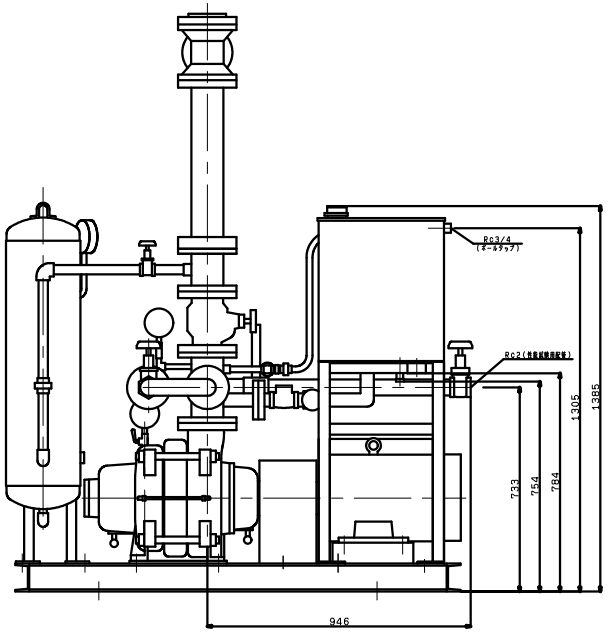KTY1005A2MN11TP
VC84