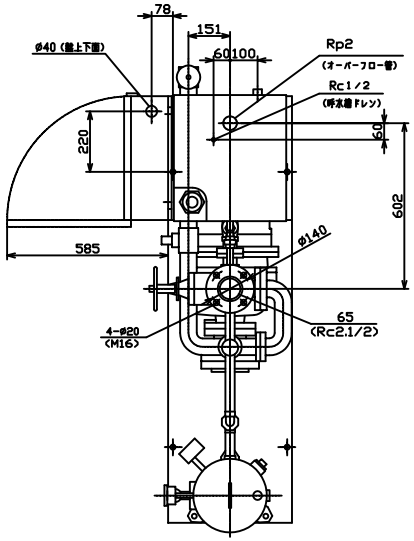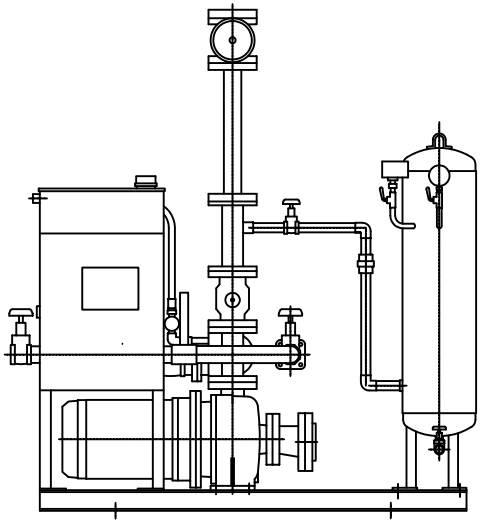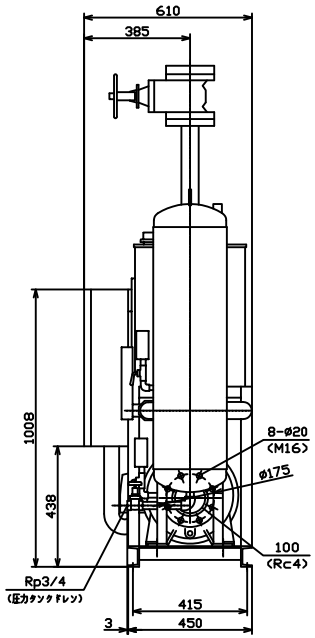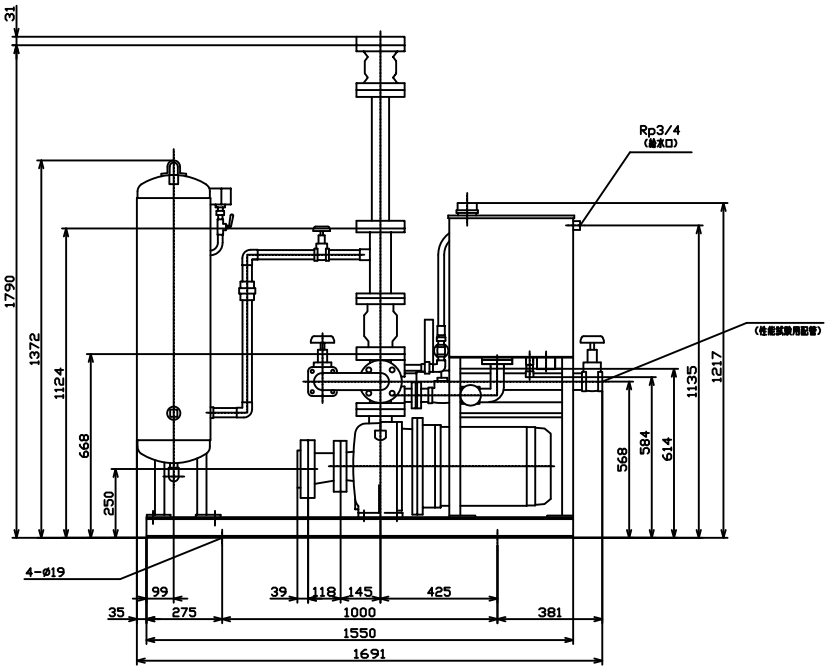KTK805C18TP
KTK806C18TP
KTK805C15TP
KTK806C15TP
KTK805C11TP
KTK806C11TP
VC(83)