KTK405C2.2T
KTK406C2.2T

KTK405CE2.2T
KTK406CE2.2T
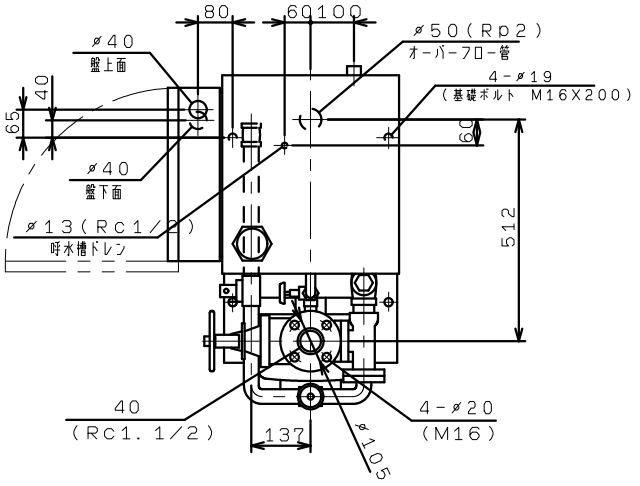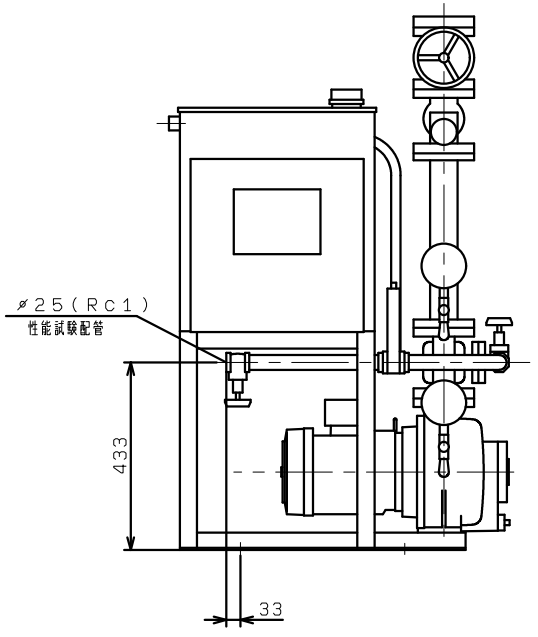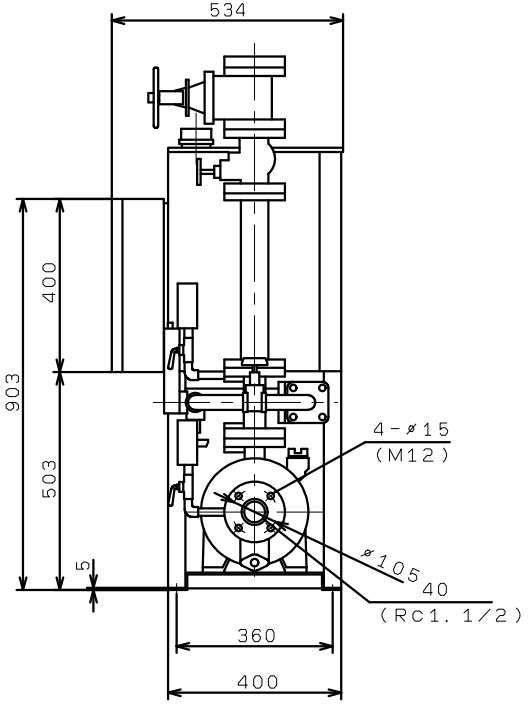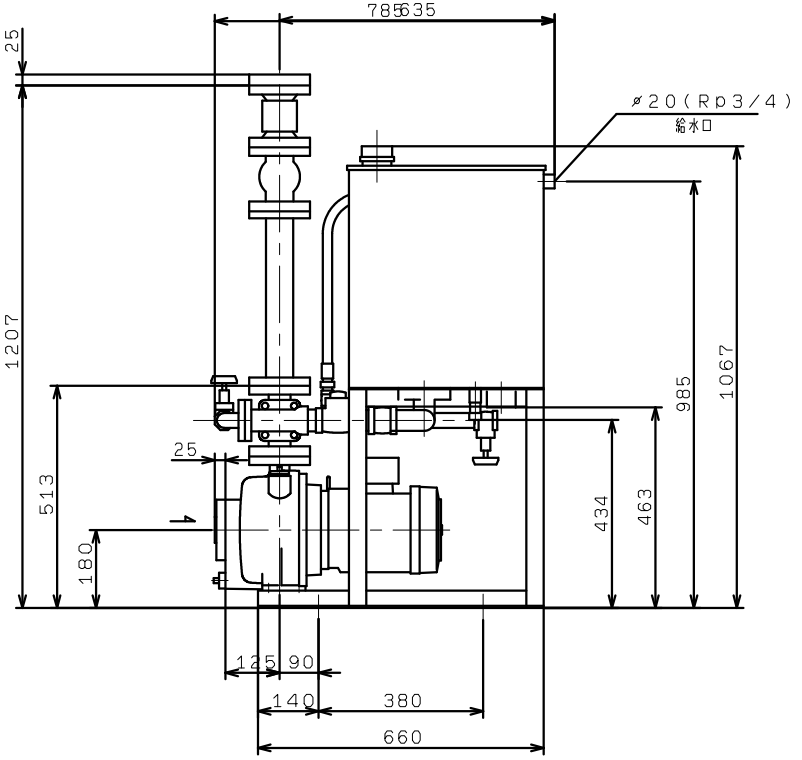
VC(82)