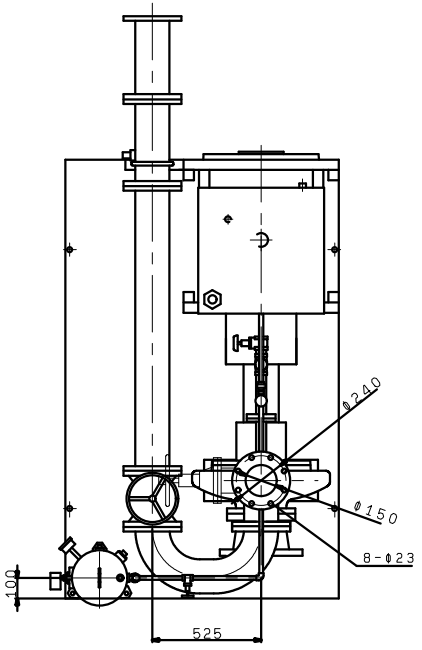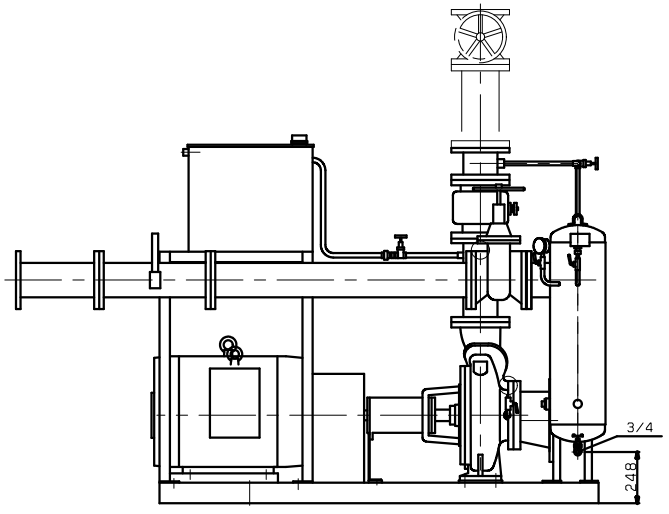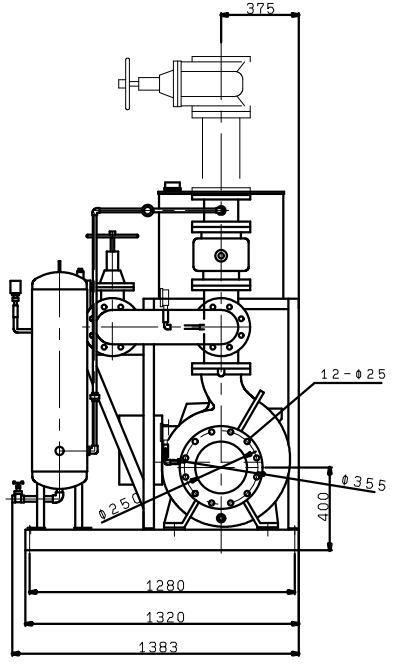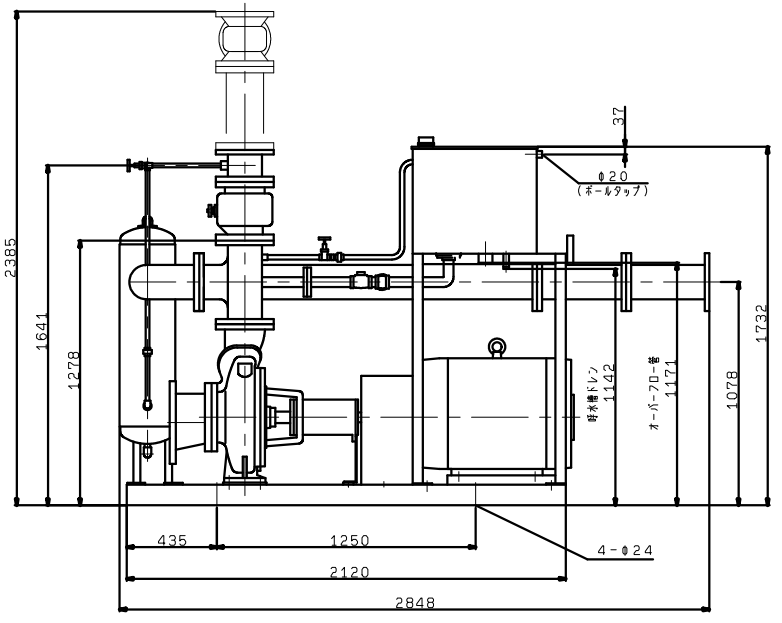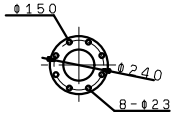KTGFO2006M160TP