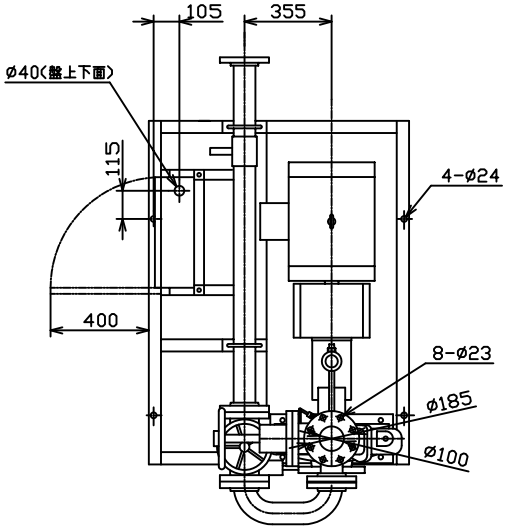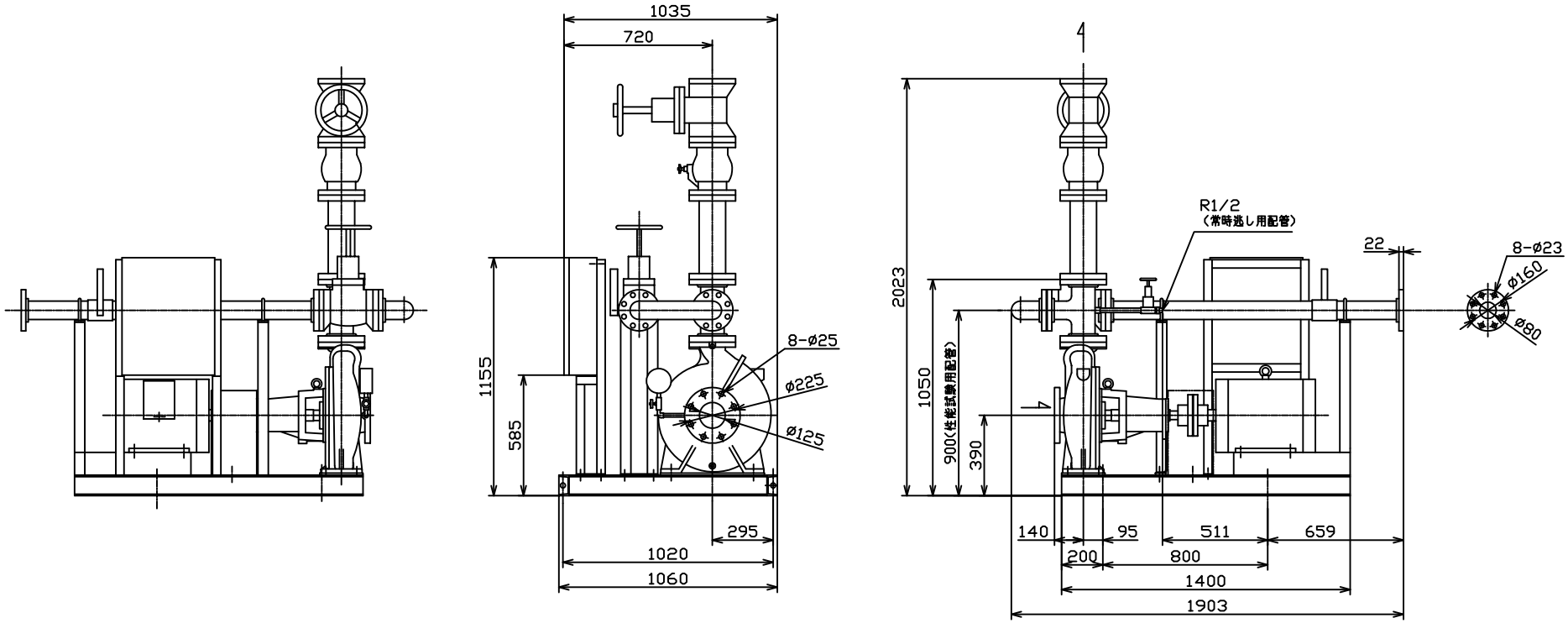KTGDF01255ME22F