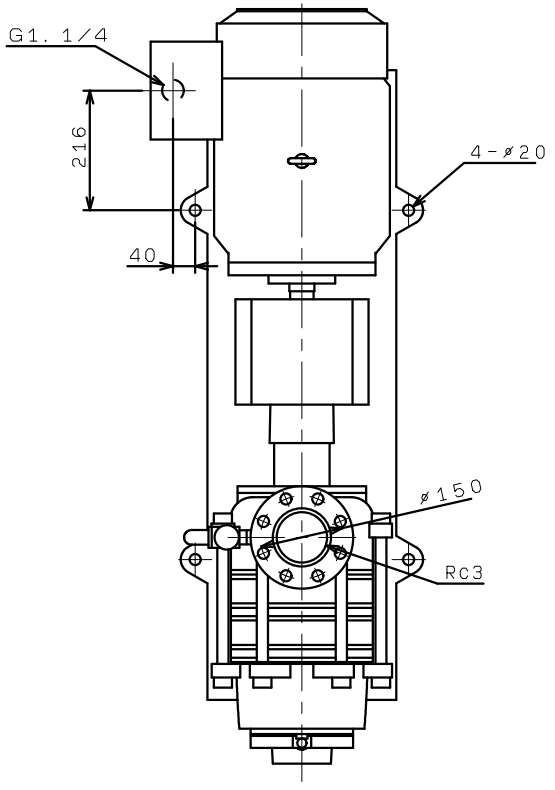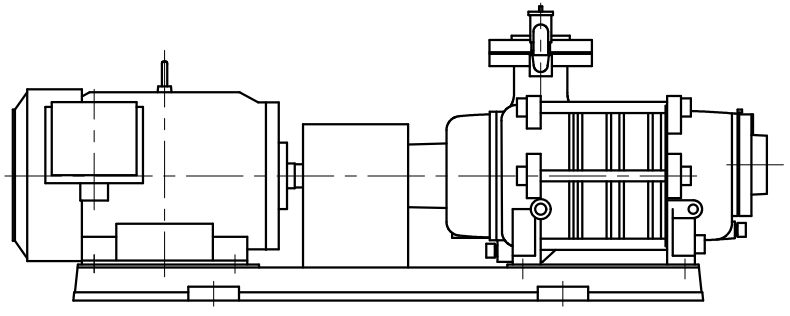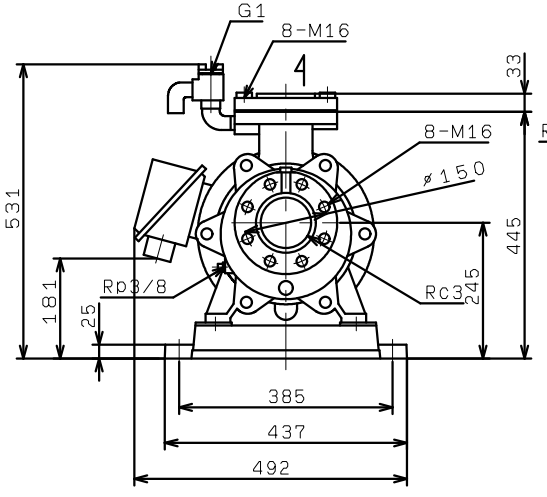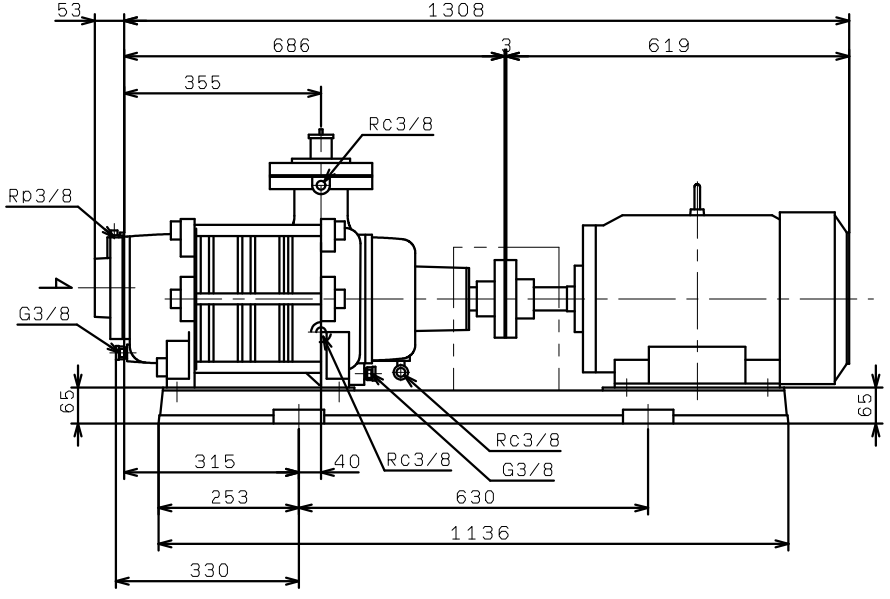KS805X3ME18
(VC30)