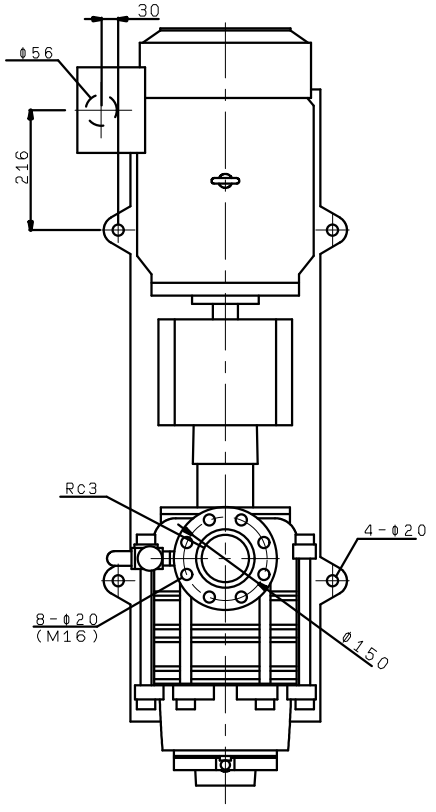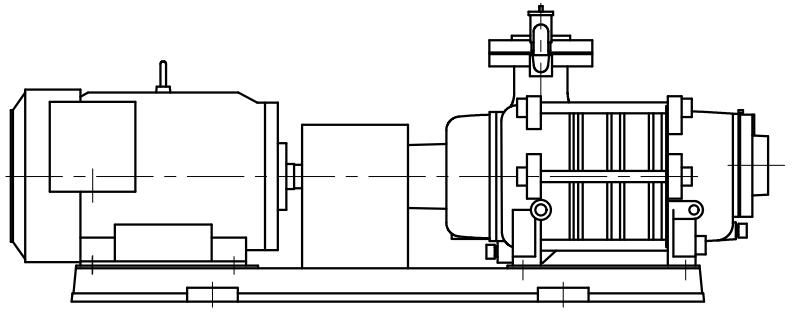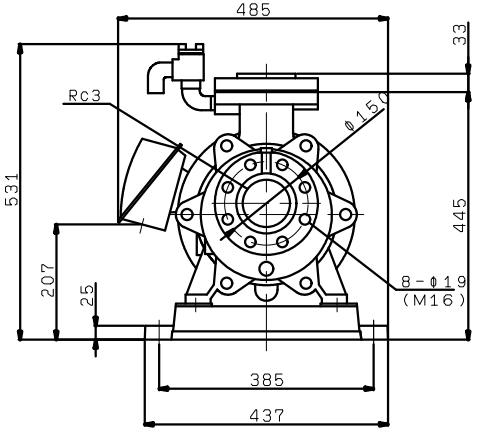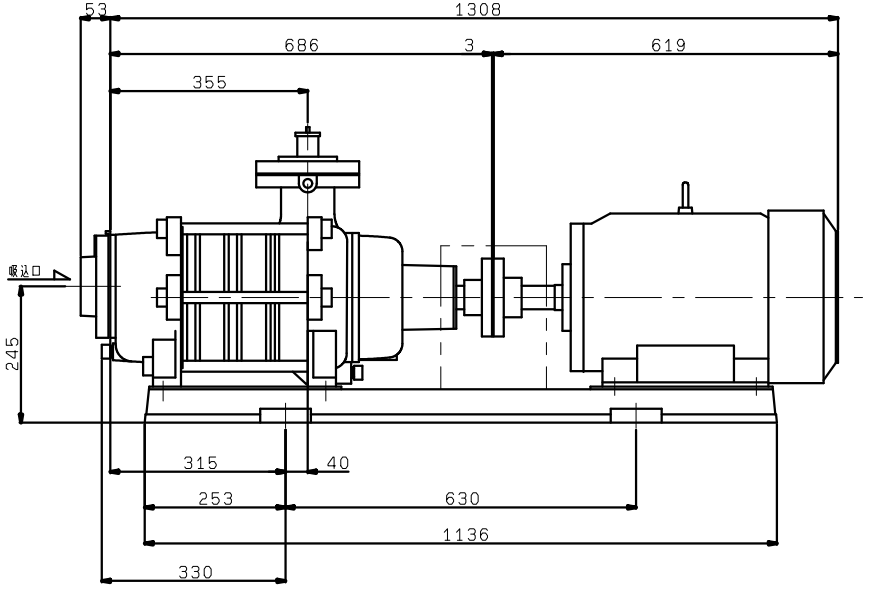KS805X3ME18