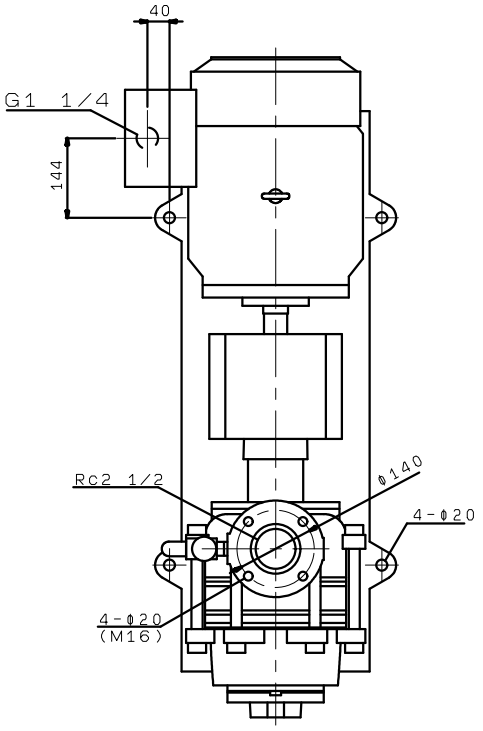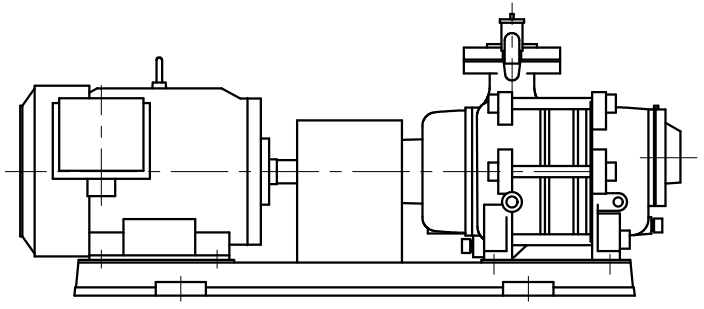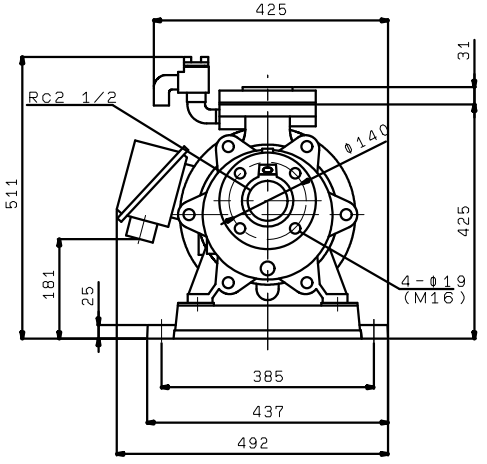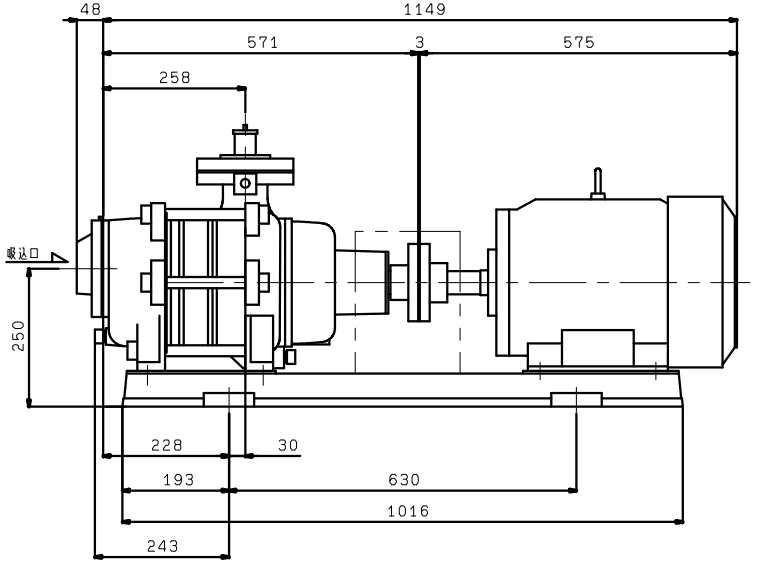KS656X2ME11
(VC30)