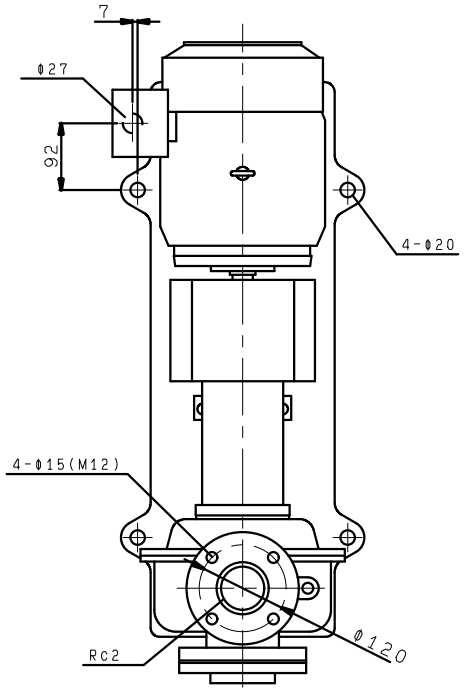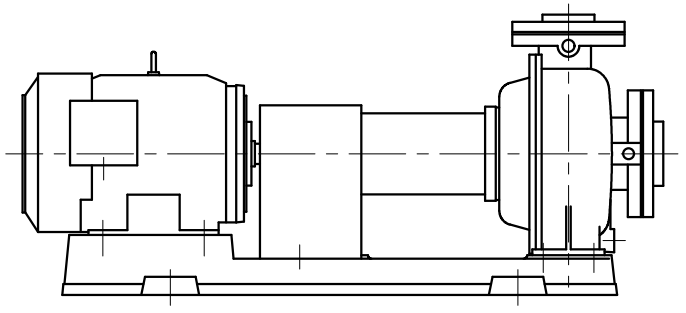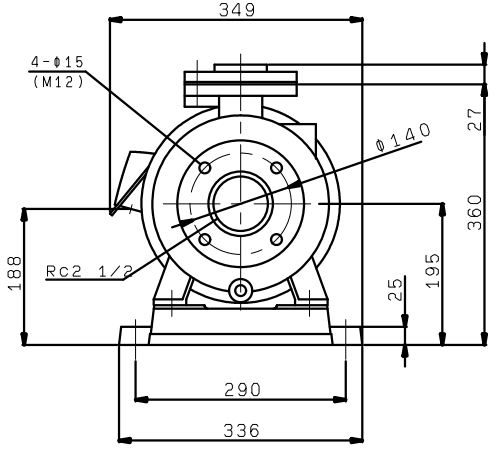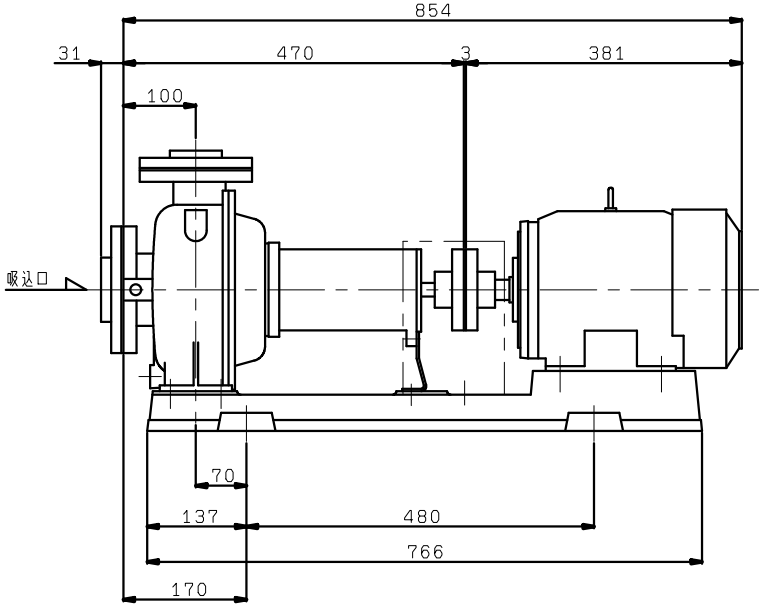KR5-655ME3.7
KR5-656ME3.7