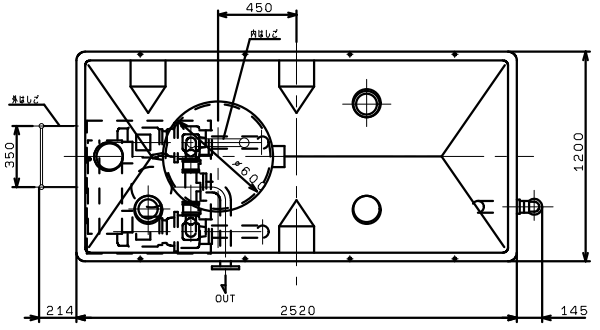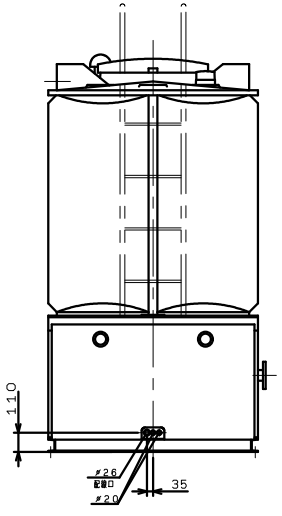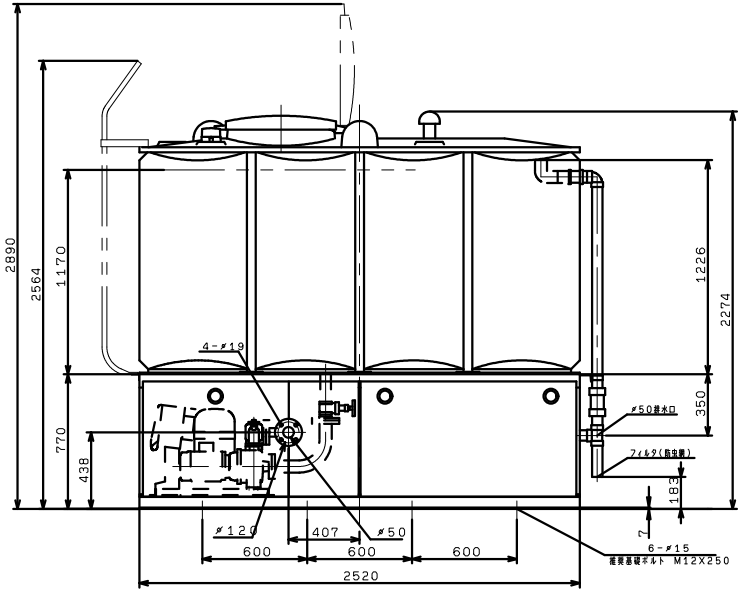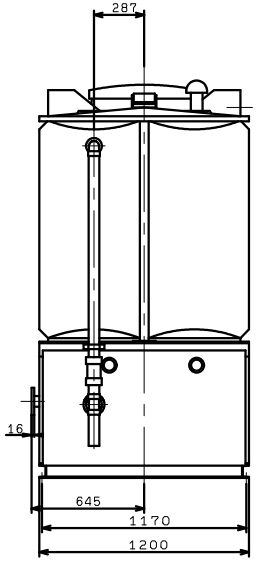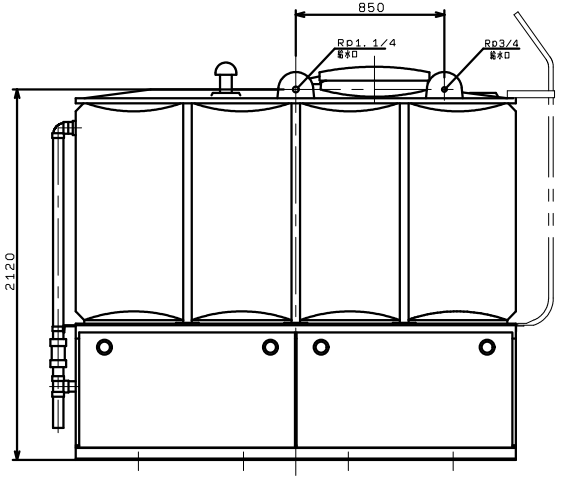KFETL3-40P1.5
KFETL3-40P2.2
KFETL3-40P3.7