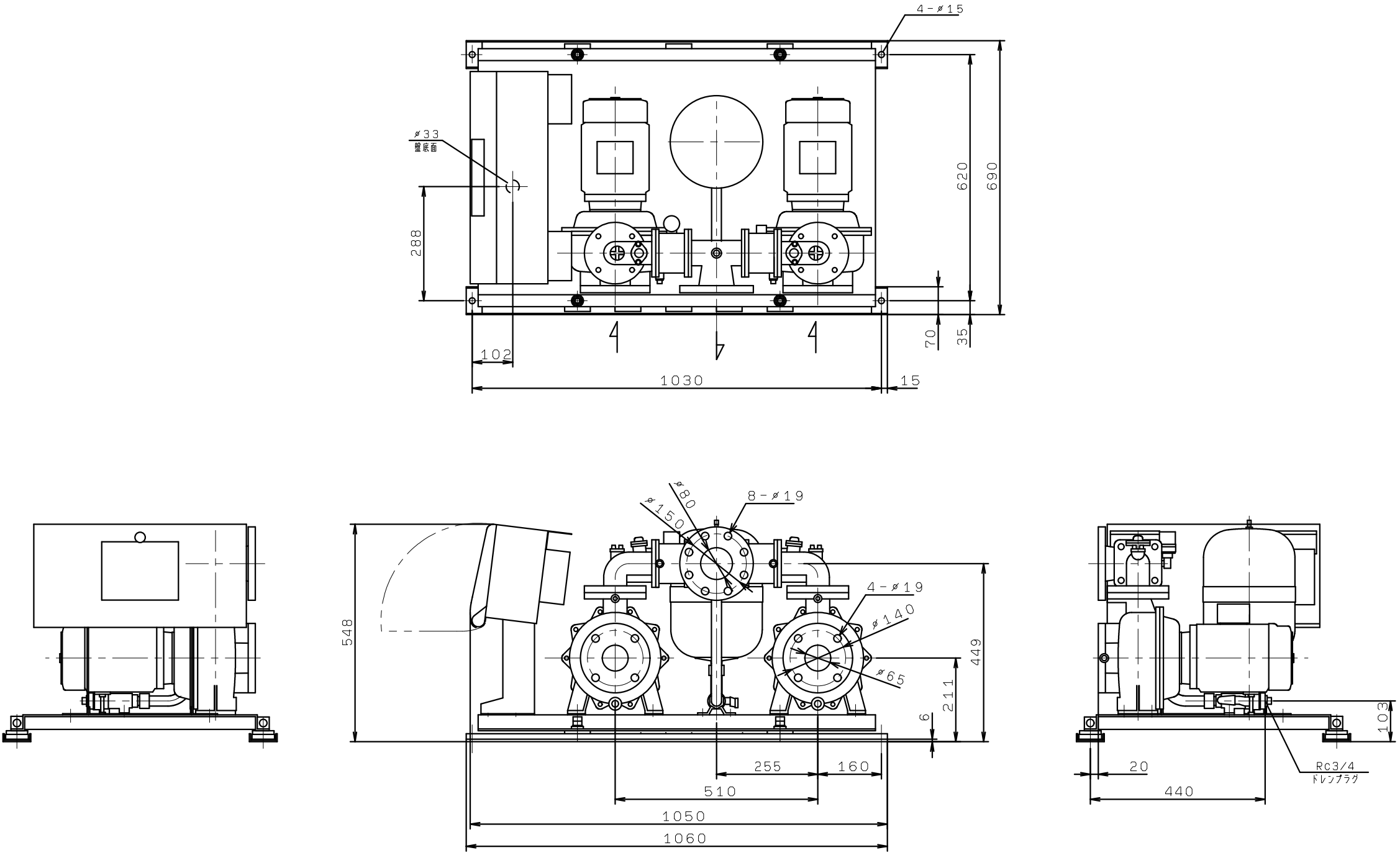KFE65P3.7
VC81