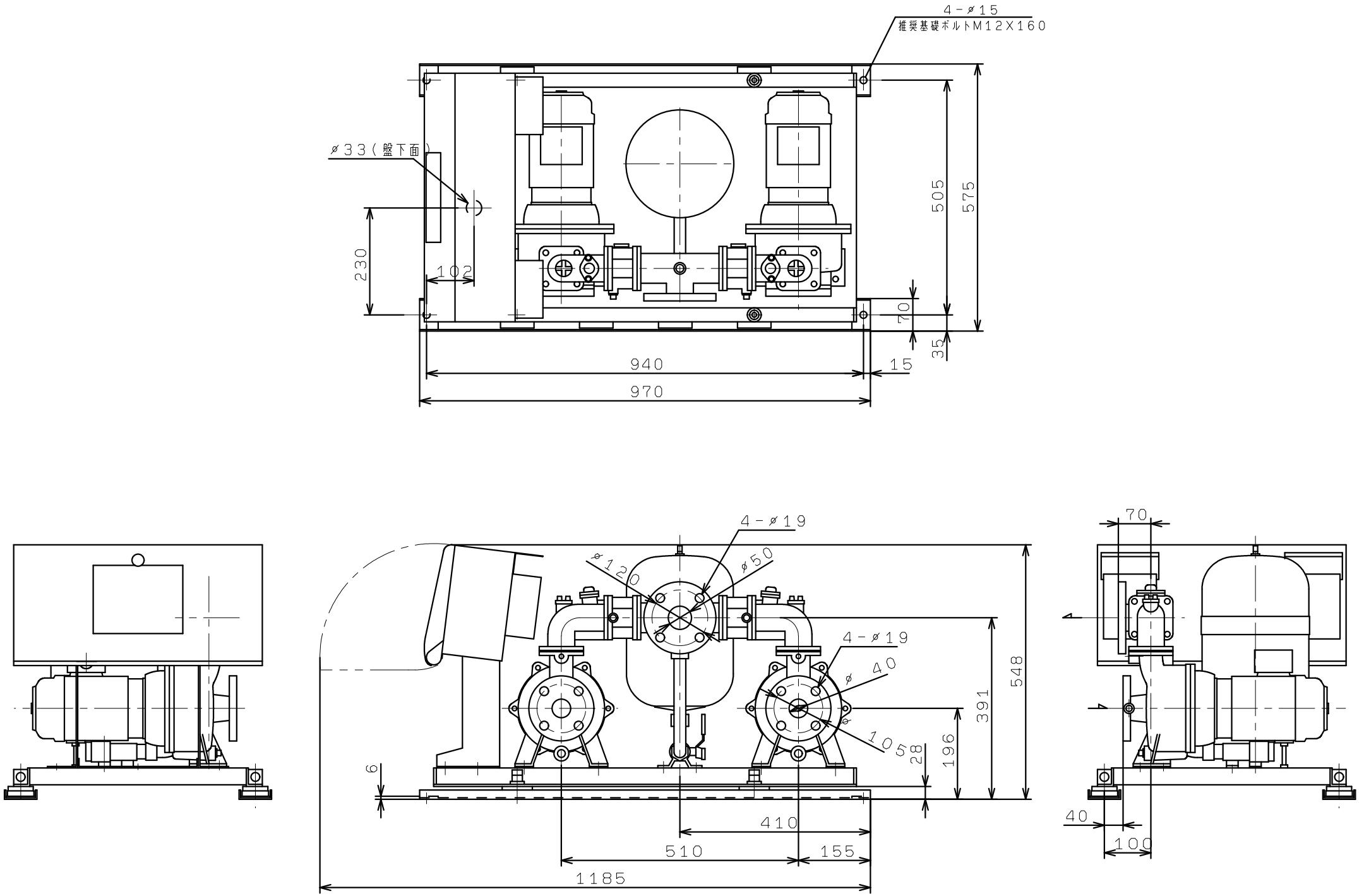KFE40P1.1
KFE40P1.5
VC81