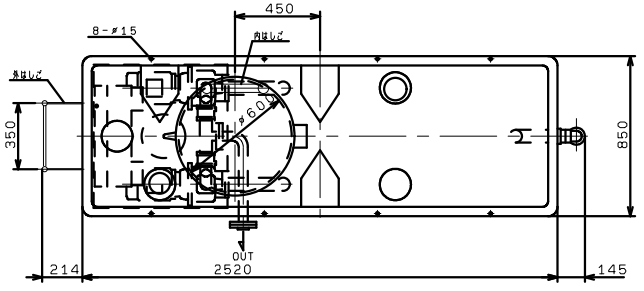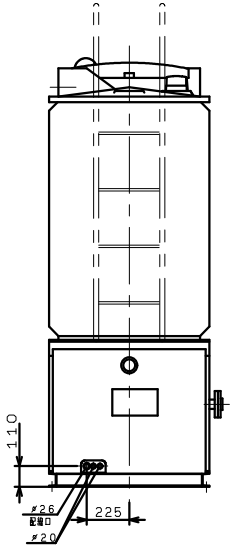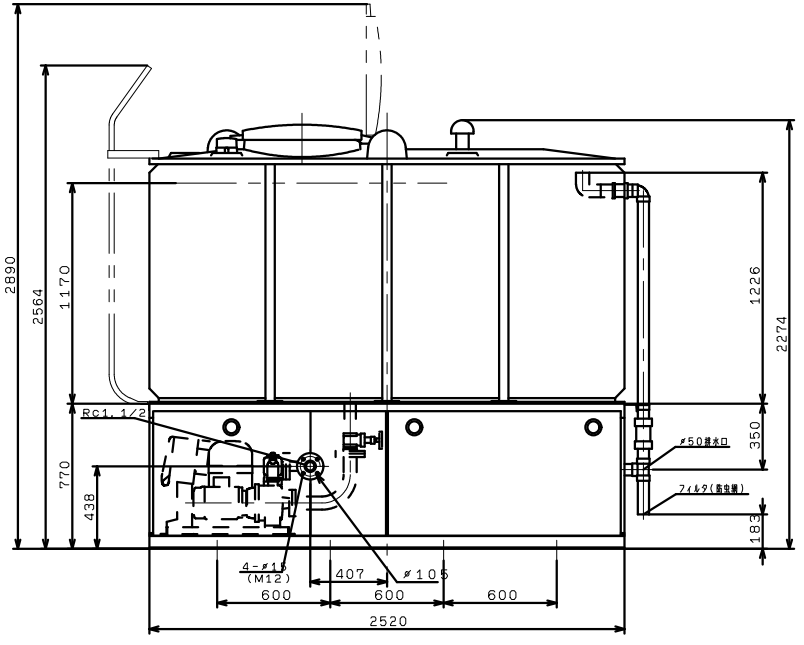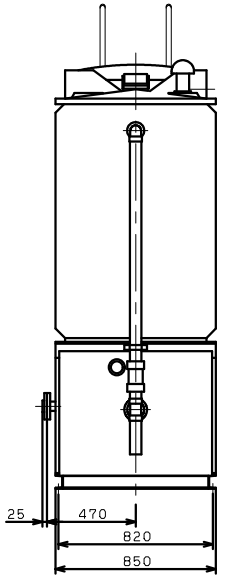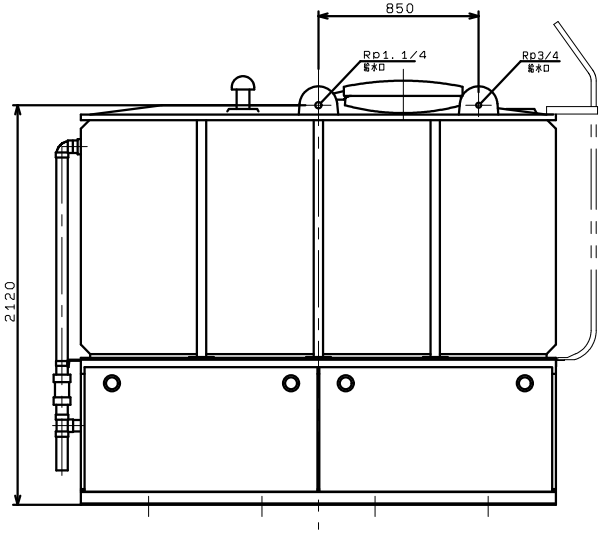KB2TL2-325PE0.75
KB2TL2-326PE0.75
KB2TL2-325PE1.1
KB2TL2-326PE1.1