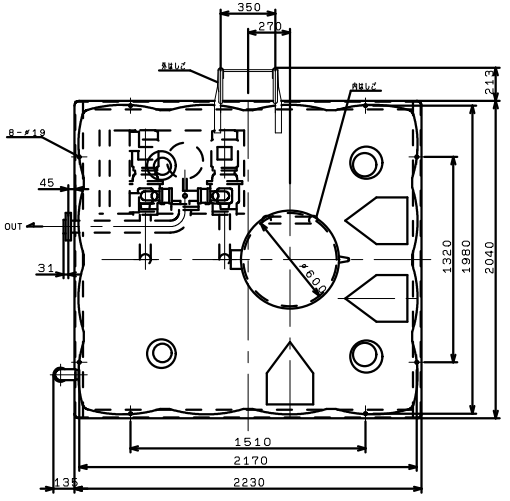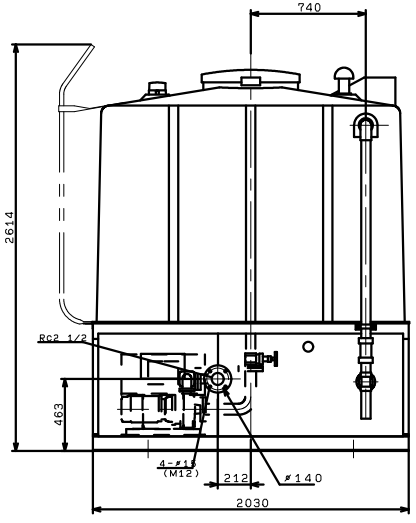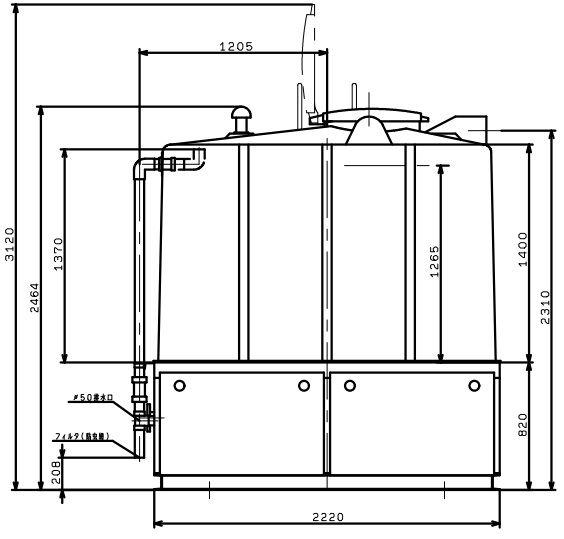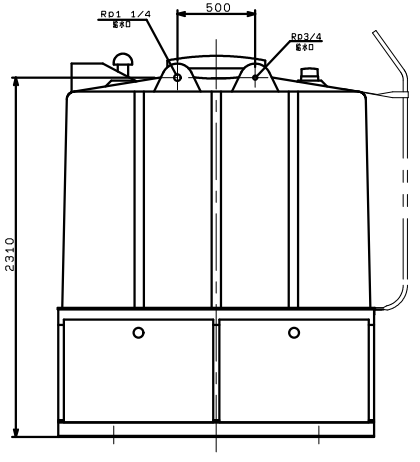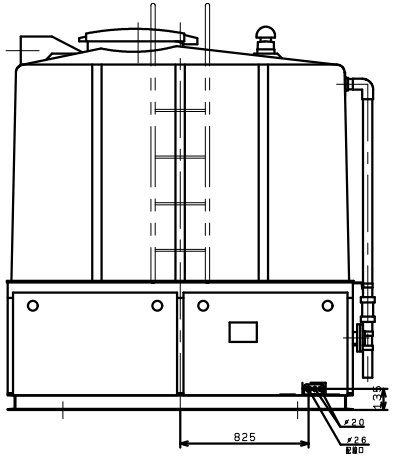KB2T5-505PE2.2
KB2T5-506PE2.2
KB2T5-505PE3.7
KB2T5-506PE3.7