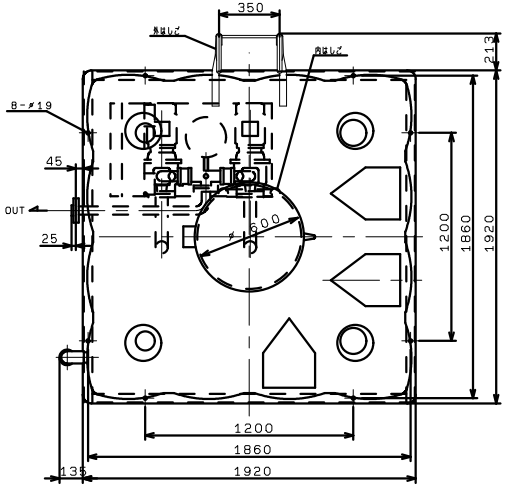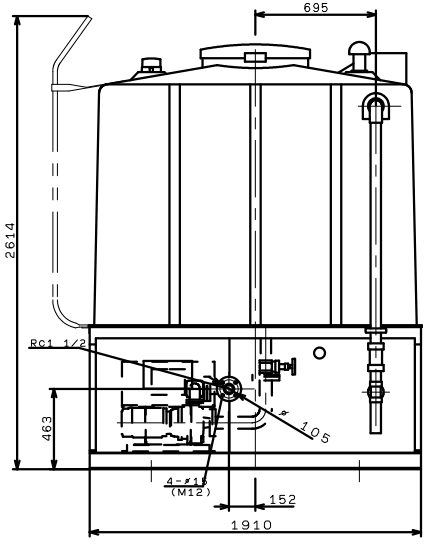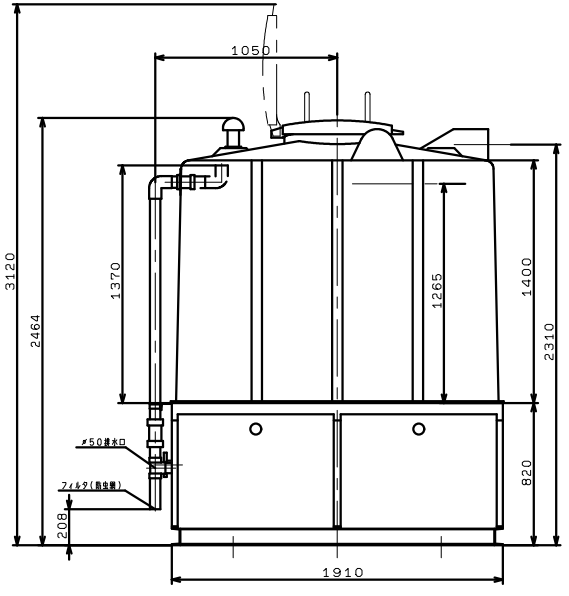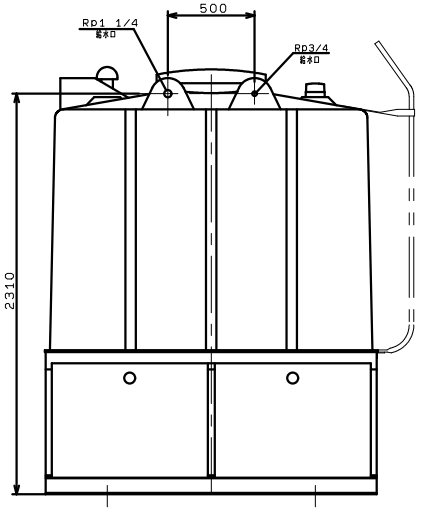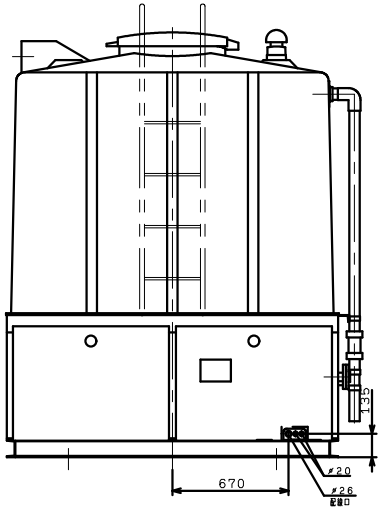KB2T4-325PE0.75
KB2T4-326PE0.75
KB2T4-325PE1.1
KB2T4-326PE1.1