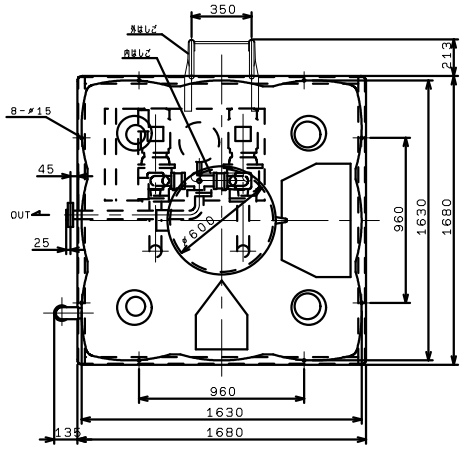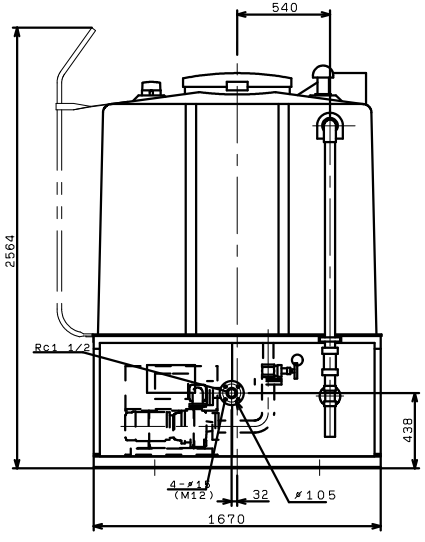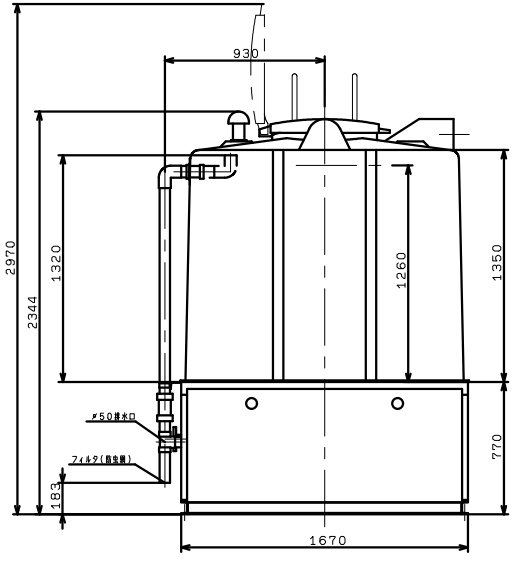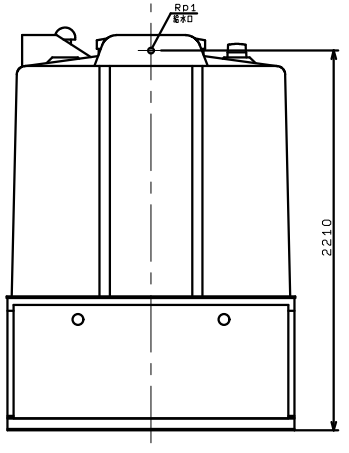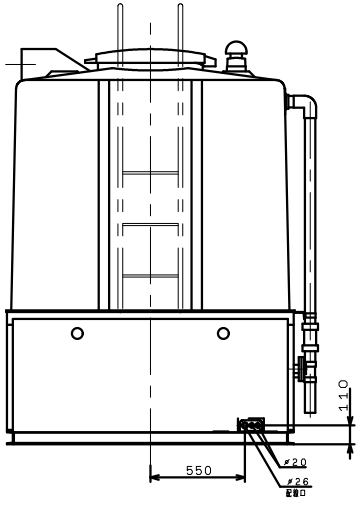KB2T3-325AE0.75
KB2T3-326AE0.75
KB2T3-325AE1.1
KB2T3-326AE1.1
KB2T3-405AE1.5
KB2T3-406AE1.5
KB2T3-405AE2.2
KB2T3-406AE2.2
KB2T3-406AE3.7
KB2T3-505AE2.2
KB2T3-506AE2.2
KB2T3-505AE3.7
KB2T3-506AE3.7