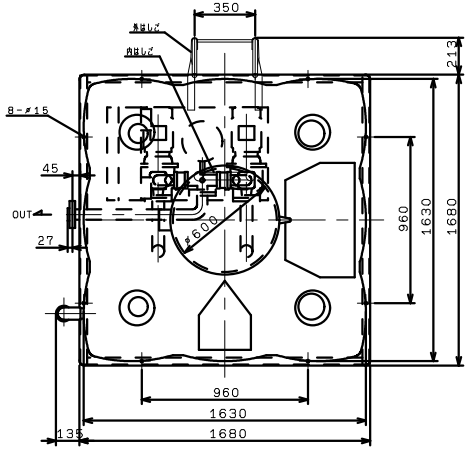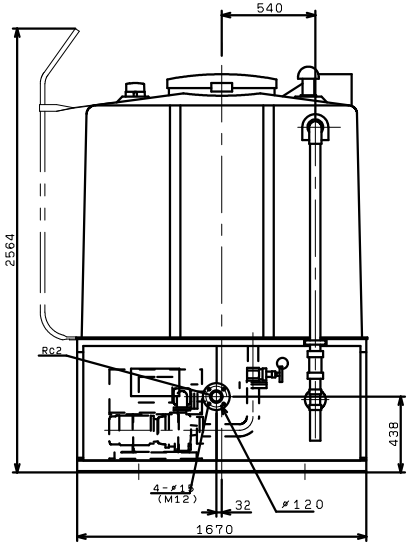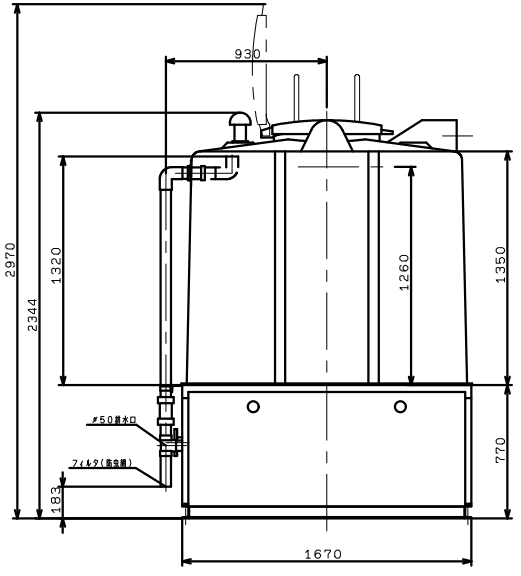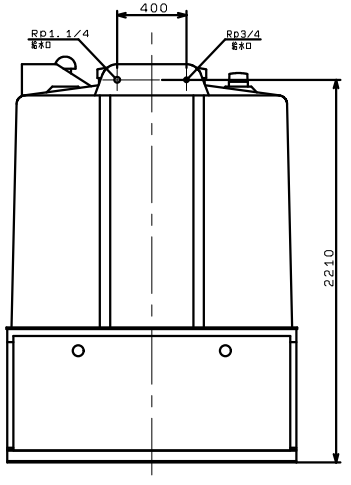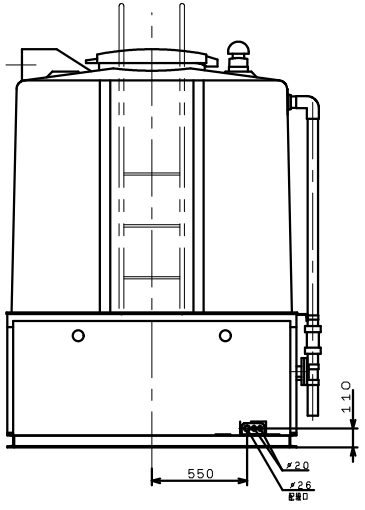KB2T3-405PE1.5
KB2T3-406PE1.5
KB2T3-405PE2.2
KB2T3-406PE2.2
KB2T3-406PE3.7