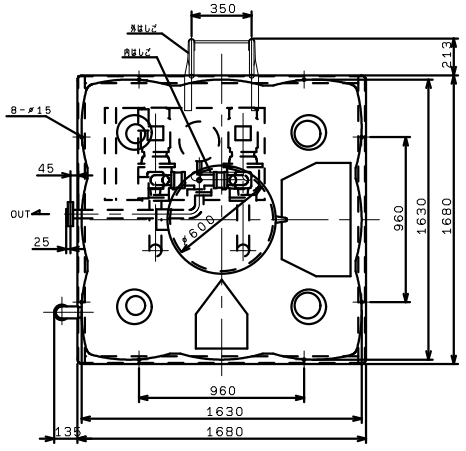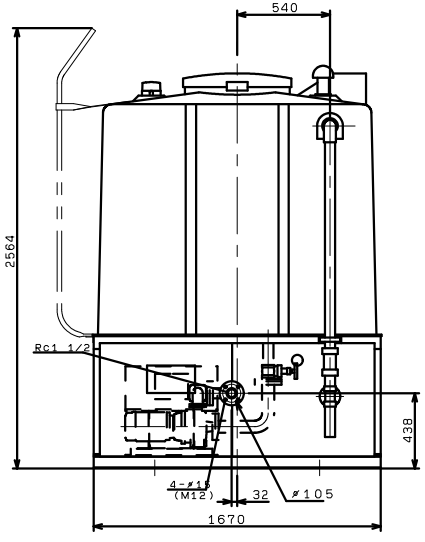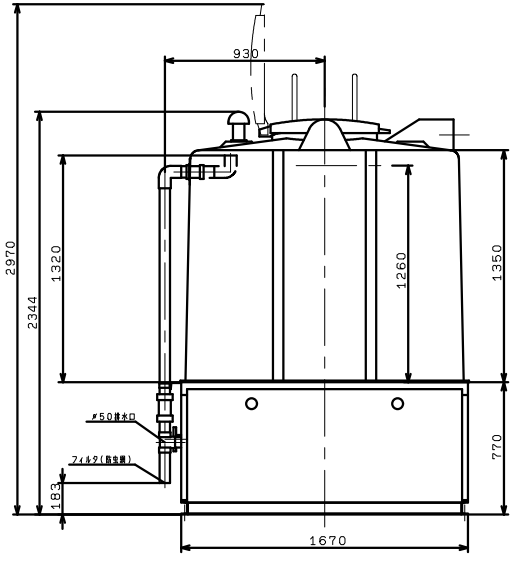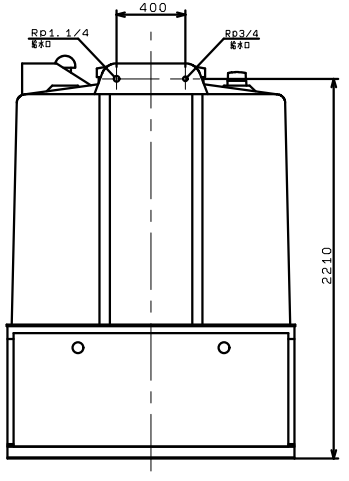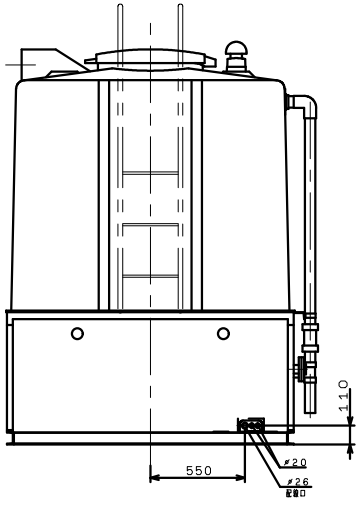KB2T3-325PE0.75
KB2T3-326PE0.75
KB2T3-325PE1.1
KB2T3-326PE1.1