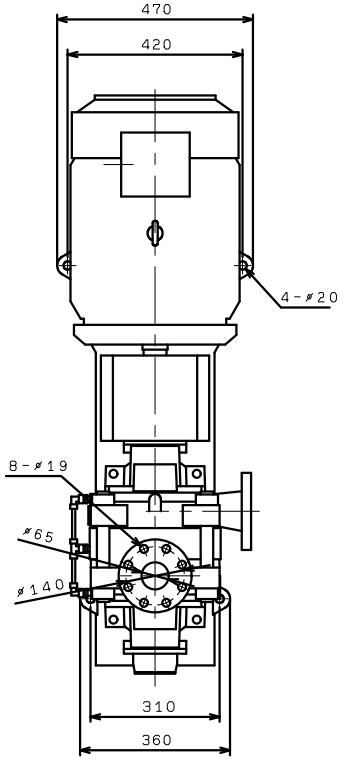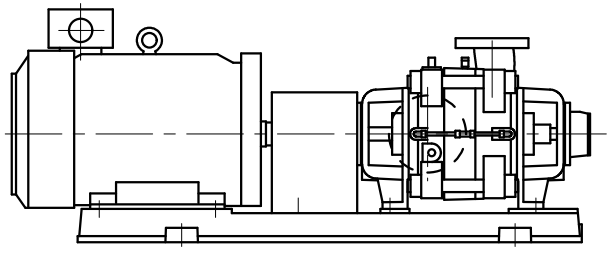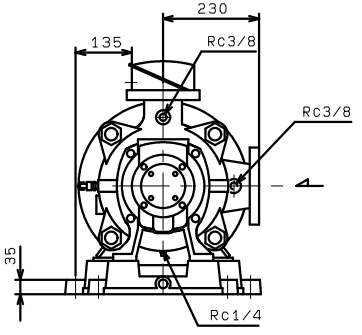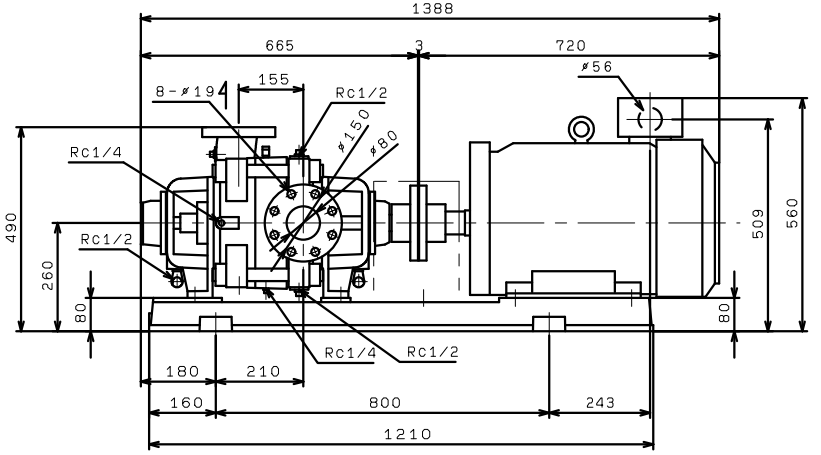K805GX2ME30
K806GX2ME30
(VC91)